servo tecnica

SLIP RINGS

Connecting dots. Providing solutions.

servo tecnica

Connecting dots.
Providing Solutions.

Contents

		in ⌀	out ⌀	circuits	
A SERIES	**Capsule Slip Rings** for Signals for High Current for Radio Frequency	N/A	12-25mm 22mm 22mm	up to 56 3 up to 24	10 - 29 12 - 17 18 - 21 22 - 25
B SERIES	**Faston Slip Rings**	N/A	32-77mm	up to 8	30 - 35
C SERIES	**Through-Bore Slip Rings**	3-100mm	17-203mm	up to 96	36 - 49
D SERIES	**Rugged Slip Rings**	N/A	75-87mm	up to 96	50 - 55
E SERIES	**Open Slip Rings**	25-60mm	74-130mm	3	56 - 61
F SERIES	**Flat Slip Rings**	40mm	180mm	20	62 - 67
	Custom Slip Rings				68 - 75

Expertise at your service

All-around services and solutions. A product selection and software development are the best proposal for specific applications.
In the automation and motion control industry since 1980, Servotecnica manufactures and proposes unique products based on cutting-edge technologies developed by leading global manufacturers.

The concernment of giving a wide range of products guarantees its presence in all sectors of the industry requiring high performances, skilled engineers, reducing machine developing time and offering a service support which grants a reliable partner for your applications.

Cost Effective

A wide range of models and solutions that can fit perfectly your applications, a team of experts able to support you during the design and development, a history from which to draw to develop the future. We can shorten the time to market delivering our experience and thus reducing costs and problems.

Custom

Our team of experts can support you in the development of a custom solution: electrical specifications, mechanical bounds, cables, connectors and more.
Furthermore, we can deliver integrated solutions mixing fluidic and fiber optic rotary joints to grant a whole coverage of your needs and the most innovative technologies in a single partner. This philosophy granted us the capacity to work in mission critical applications.

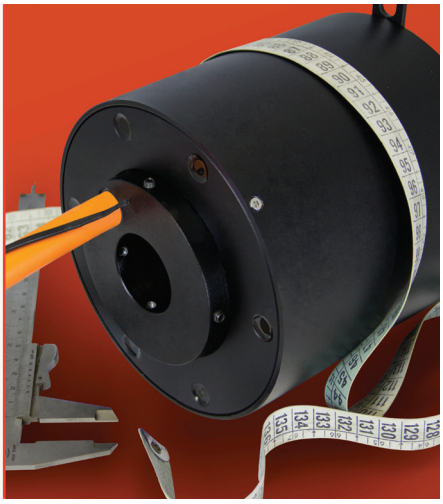

The widest range

More than 2000 standard and 400 custom models of electrical rotary joints, 150 standard and 300 custom models of fluidic rotary joints and 50 models of fiber optic rotary joints grant us the possibility of an impressive number of combinations. The possibility to customize easily our products and the continuous attention to market needs and trends constantly increase our proposal to customers.

Industries

Electronics

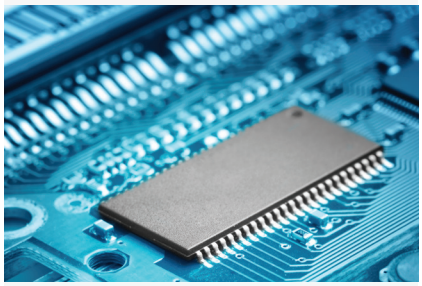

Semiconductors
Test
Wafer

Aerospace

Air
Land
Sea

Medical

Diagnosis
Pharm & Beauty
Radiology
Odontology
Mobile tools

Robotics

Humanoid robotics
Inspection robotics
Flexible automation
Welder's tongs

Packaging

Filling & labelling
Capping
Food & beverage
Packaging
Scales

Automatic doors

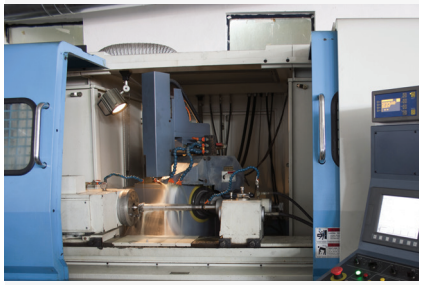

Lifts
Linear doors
Revolving dors
Locks

Machine tool

Machine centre
Sheet metal forming
Electrical discharge
Press machines
Lathe machines

Energy

Renewable energy
Not renewable energy
Wind turbines

Converting

Digital ink jet
Flexographic printing
Offset printing
Plane printing
Rotogravure

Amusement parks

Merry-go-round

Plastics

Blow molding
Plastic bags
Extrusion

Oil & gas

Oil
Gas
Atex
Valves

Build it yourself.

The new online Slip Ring configurator is here!

Define

Define your limits whether they are mechanical -like internal and external diameter- or electrical -like current and number of circuits.

Choose among a world of features and find what best fits your requirements among over 2000 models.

Compare

Add your starting choices to the comparative table.

Sort the items as you please with the drag-n-drop logic and quickly spot the differences between them.

Select

Pick one or more options and add them to the basket.
Get the complete part number and the summary of the technical specifications.

Get a quote

Fill the form with your contact information and drop a line if needed. We will get back to you within 24 hours.

Try it now!

Scan the **QR code**
or visit
www.servotecnica.com

What you are looking for isn't there?
Not a problem, let's work together on your custom solution.

info@servotecnica.com
+39 03624921

Part number

	Series	Model		IP		Flange		N. of circuits Power / Signal		Cable length Brush side / Ring side		Temp. range		Options
SVTS	A	03	-	S	-	A	-	00 / 12	-	0250 / 0250	-	ST	-	E1G

Series

A / Capsule Slip Rings
B / Faston Slip Rings
C / Through-Bore Slip Rings
D / Stainless Steel Slip Rings
E / Frameless Slip Rings
F / Flat Slip Rings

Model

01, 02, 03, ... / *See specific section*

IP grade

R / IP00
S / IP51
T / IP54
U / IP65

Flange

A / Standard
B, C, D, E, F / *See specific section*

Power circuits

See specific section for available multiples

Signal circuits

See specific section for available multiples

Cable length / Brush side

SVTS A /
Custom cable length increase possible as multiple of 250mm

SVTS B, C, D, E, F /
Custom cable length increase possible as multiple of 500mm

Cable length / Ring side

SVTS A /
Custom cable length increase possible as multiple of 250mm

SVTS B, C, D, E, F /
Custom cable length increase possible as multiple of 500mm

Temperature range

ST / -20°C +80°C

ET / -40°C +80°C

Special Options

SVTS A 03
001 / 4A circuits
002 / 8A circuits
003 / 10A circuits
004 / 20A circuits
E1M / 100 BaseT Ethernet
E1G / 1000 BaseT Ethernet

SVTS A 04
E1M / 100 BaseT Ethernet
E1G / 1000 BaseT Ethernet

SVTS A 06
Coax cable
01* / RG174
02* / RG316
03* / RG178
04* / RG179

Connectors
**1 / MMCX
**2 / SMA
**3 / SMB
**4 / MCX
**5 / BNC

SVTS C 05
E1M / 100 BaseT Ethernet
E1G / 1000 BaseT Ethernet
OP1 / 6mm air plastic passage
OP2 / 10mm air plastic passage

SVTS E 01
001 / 20A Circuits
002 / 40A Circuits

SVTS E 02
001 / 20A Circuits
002 / 40A Circuits

SVTS E 03
001 / 20A Circuits
002 / 40A Circuits
003 / 60A Circuits

SVTS E 04
001 / 20A Circuits
002 / 40A Circuits
003 / 60A Circuits

SVTS A Series

Capsule Slip Rings
High-current Capsule Slip Rings
Radio Frequency Capsule Slip Rings

Contents

	Model	Out ⌀	Page
CAPSULE	SVTS A 01	12mm	14
	SVTS A 02	15mm	14
	SVTS A 03	22mm	15
	SVTS A 03 - Ethernet	22mm	15
	SVTS A 04	25mm	16
	SVTS A 04 Ethernet	25mm	16
HIGH CURRENT	SVTS A 05	22mm	20
RF	SVTS A 06	22mm	24
	Flange types		26

SVTS A Series

Capsule

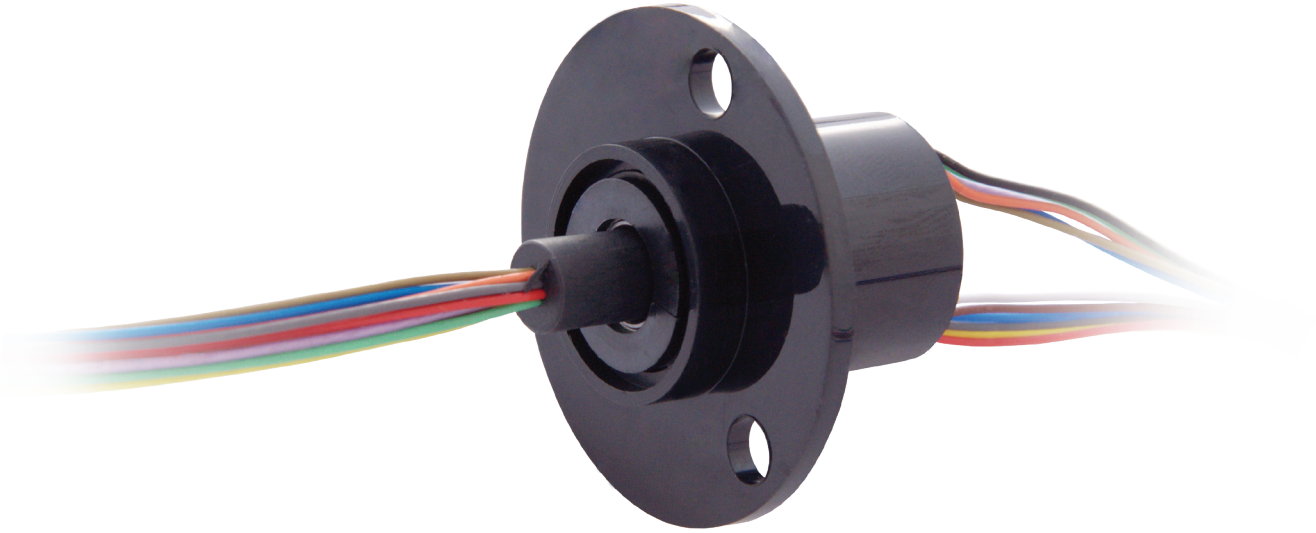

OPTIMAL SIGNAL TRANSMISSION | COMPACT | HIGH CIRCUIT DENSITY

The capsule A Series Slip Rings, thanks to their reduced diameter, guarantees a low peripheral speed between rings and brushes, thus to reduce material consumption so as to enhance its lifetime and minimise electrical noise and interferences between rings.
This Series has been designed keeping signal transmission optimisation, compactness and reliability in mind. Moreover, this Slip Ring family is available in a wide range of configurations, from 3 to 56 circuits.
The gold-gold technology used for both rings and brushes, makes high data rate and high frequency signal transmission possible.

Benefits

- Optimal signal transmission (gold-gold technology)
- Compact
- Light
- Many customisations
- High circuits density
- Combinable with fluidic rotary joints and FORJ
- Water resistant (IP65)*
- Cost-effective

Main applications

Video systems	Control systems
Moving head projectors	Medical / pharmaceutical
Packaging	Wind turbines
Hose & cable reels	

*Optional: SVTS A 03 only

Product code (go to page 9 for the detailed coding system)

SVTS A ⬠⬠ - □ - ▭ - ✕✕/⬡⬡ - ◇◇◇◇/✧✧✧✧ - △△ - ☆☆☆

A Series | ⬠ Model | □ IP grade [1] | ▭ Flange type | ✕ Power circuits | ⬡ Signal circuits

◇ Cable length (brush side) | ✧ Cable length (ring side) | △ Temperature range [2] | ☆ Special options [3]

[1] IP51 [S]; IP65 [U]
[2] Standard [ST]; Extended [ET]
[3] Ethernet 100BaseT [E1M]; Ethernet 1000BaseT [E1G]

Features

Current	1A: continuous - 2A peak: AWG28 2A: AWG26 4A: AWG22 6A: AWG20 8A: AWG16
Voltage	240 VDC / 240 VAC
Cables	Silver plated / PTFE insulated / colour coded
Cables length	Standard: 250mm; custom cable length increase possible as multiples of 250mm
Dielectric strength	500 VAC @ 60Hz @ 60 sec
Insulation resistance	> 500 MΩ / 500 VDC
Dynamic contact resistance	< 10 mΩ
Nominal speed	250 rpm (higher speed, up to 600 rpm, upon request)
Bearings	Miniature high-precision stainless steel ball bearings
Housing	ABS (hard plastic); Alluminium (SVTS A04)
Contact	Gold-gold (alloy)
Temperature	-20°C to +80°C (-40°C as option)
Protection	IP51; IP65*
Expected lifetime	10^7 revolutions (depending on speed, environmental conditions and size)

*Optional: SVTS A 03 only

Combinations

Electric	Fieldbus	Fluidic (combined solutions)
Signals	EtherCAT	Air
	Profinet	Oil
	Sercos	Water
	Powerlink	
	Ethernet	

Customizations

Cables	Mechanical design	Flange
Materials		

SVTS A 01

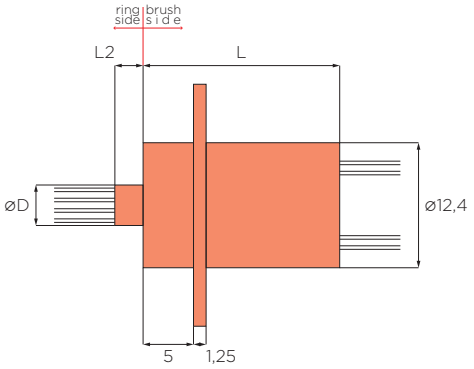

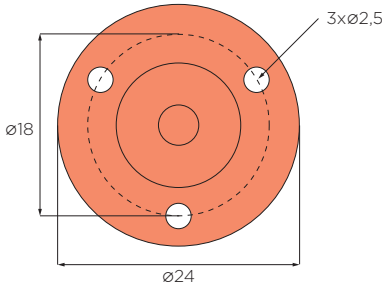

See page 26 for different flange options
Custom cable length increase possible as multiples of 250mm

Model	Number of circuits		Dimensions				Housing
	Total	Signals	Outside ⌀	*L*	*L2*	*D*	
		1-2A					
SVTS A 01-S-A-00/06	6	6	12.4	14	2.8	4	ABS
SVTS A 01-S-A-00/12	12	12	12.4	19.5	2.8	4	ABS
SVTS A 01-S-A-00/18	18	18	12.4	23	2.8	4	ABS
IP65 SVTS A 01-U-A-00/06	6	6	12.4	18	9.5	6	Al
SVTS A 01-U-A-00/12	12	12	12.4	23.5	9.5	6	Al
SVTS A 01-U-A-00/18	18	18	12.4	27	9.5	6	Al

SVTS A 02

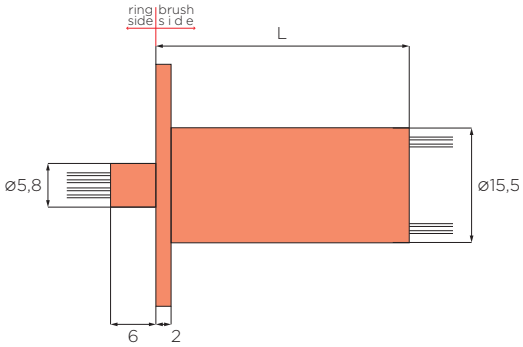

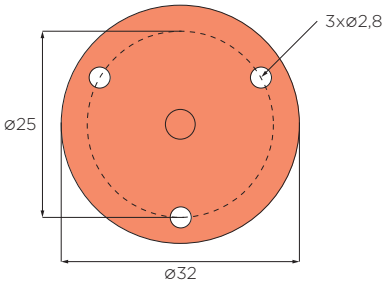

See page 26 for different flange options
Custom cable length increase possible as multiples of 250mm

Model	Number of circuits				Dimensions		Housing
	Total	Signals	Power		Outside ⌀	*L*	
		1-2A	6A	8A			
SVTS A 02-S-A-00/24	24	24	-	-	15.5	34	ABS

All dimensions in millimeters, unless otherwise specified

SVTS A 03

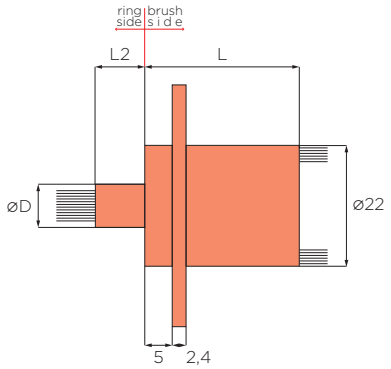

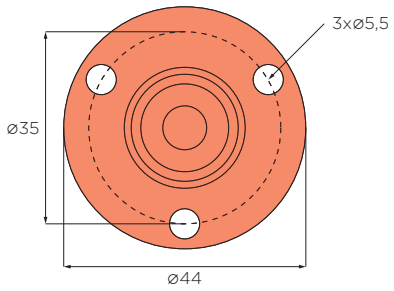

See page 26 for different flange options
Custom cable length increase possible as multiples of 250mm

Model	Number of circuits				Dimensions				Housing
	Total	Signals	Power		Outside ø	*L*	*L2*	*D*	
		1-2A	6A	8A					
SVTS A 03-S-A-00/06	6	6	-	-	22	19	9	7,8	ABS
SVTS A 03-S-A-00/12	12	12	-	-	22	28	9	7,8	ABS
SVTS A 03-S-A-02/02	4	2	2	-	22	28	9	7,8	ABS
SVTS A 03-S-A-00/15	15	15	-	-	22	29,5	9	7,8	ABS
SVTS A 03-S-A-00/18	18	18	-	-	22	33,4	9	7,8	ABS
SVTS A 03-S-A-03/00	3	-	-	3	22	33,4	9	7,8	ABS
SVTS A 03-S-A-00/24	24	24	-	-	22	41,2	9	7,8	ABS
SVTS A 03-S-A-04/06	10	6	4	-	22	41,2	9	7,8	ABS
SVTS A 03-S-A-00/30	30	30	-	-	22	49,2	6	7,8	ABS
SVTS A 03-S-A-00/36	36	36	-	-	22	57	9	7,8	ABS
SVTS A 03-S-A-02/02	4	2	2	-	22	33.5	12,5	13	Al
SVTS A 03-S-A-00/15	15	15	-	-	22	38	12,5	13	Al
SVTS A 03-S-A-00/18	18	18	-	-	22	38	12,5	13	Al
SVTS A 03-S-A-04/06	10	6	4	-	22	45.2	12,5	13	Al
SVTS A 03-S-A-00/30	30	30	-	-	22	53.2	12,5	13	Al
SVTS A 03-S-A-00/36	36	36	-	-	22	61	12,5	13	Al
IP65 SVTS A 03-U-A-00/06	6	6	-	-	22	23	12,5	13	Al
SVTS A 03-U-A-00/12	12	12	-	-	22	32	12,5	13	Al
SVTS A 03-U-A-00/24	24	24	-	-	22	45.2	12,5	13	Al

Ethernet option*

Model	Number of circuits			*L*	Weight (kg)
	Total	Signals	Ethernet		
		2A			
SVTS A 03-S-A-00/00-...-E1M	5	-	100BaseT	19	0,03
SVTS A 03-S-A-00/06-...-E1M	11	6	100BaseT	28	0,05
SVTS A 03-S-A-00/09-...-E1M	14	9	100BaseT	29,5	0,05
SVTS A 03-S-A-00/12-...-E1M	17	12	100BaseT	33,4	0,05
SVTS A 03-S-A-00/18-...-E1M	23	18	100BaseT	41,2	0,07
SVTS A 03-S-A-00/30-...-E1M	35	30	100BaseT	57	0,08
SVTS A 03-S-A-00/00-...-E1G	9	-	1000BaseT	28	0,05
SVTS A 03-S-A-00/03-...-E1G	12	3	1000BaseT	29,5	0,05
SVTS A 03-S-A-00/06-...-E1G	15	6	1000BaseT	33,4	0,05
SVTS A 03-S-A-00/12-...-E1G	21	12	1000BaseT	41,2	0,07
SVTS A 03-S-A-00/24-...-E1G	33	24	1000BaseT	57	0,08

*RJ 45 connectors included

All dimensions in millimeters, unless otherwise specified

SVTS A 04

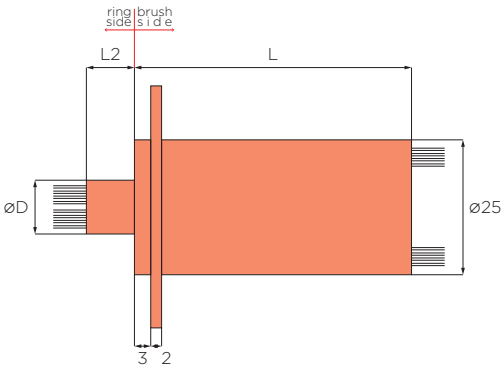

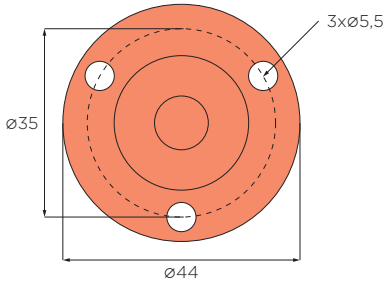

See page 26 for different flange options
Custom cable length increase possible as multiples of 250mm

	Model	Number of circuits				Dimensions				Housing
		Total	Signals	Power		Outside ø	*L*	*L2*	*D*	
			1-2A	6A	8A					
	SVTS A 04-S-A-00/30	30	30	-	-	25	51.5	9	9.8	Al
	SVTS A 04-S-A-04/18	22	18	4	-	25	51.5	9	9.8	Al
	SVTS A 04-S-A-03/15	18	15	-	3	25	51.5	9	9.8	Al
	SVTS A 04-S-A-00/36	36	36	-	-	25	59.5	9	9.8	Al
	SVTS A 04-S-A-04/24	28	24	4	-	25	59.5	9	9.8	Al
	SVTS A 04-S-A-04/16	20	16	-	4	25	59.5	9	9.8	Al
	SVTS A 04-S-A-00/46	46	46	-	-	25	72.5	9	9.8	Al
	SVTS A 04-S-A-00/56	56	56	-	-	25	85.5	9	9.8	Al
	SVTS A 04-S-A-04/44	48	44	4	-	25	85.5	9	9.8	Al
	SVTS A 04-S-A-04/36	40	36	-	4	25	85.5	9	9.8	Al
IP65	SVTS A 04-U-A-00/30	30	30	-	-	25	55.7	12.5	11.5	Al
	SVTS A 04-U-A-04/18	22	18	4	-	25	55.7	12.5	11.5	Al
	SVTS A 04-U-A-03/15	18	15	-	3	25	55.7	12.5	11.5	Al
	SVTS A 04-U-A-00/36	36	36	-	-	25	63.5	12.5	11.5	Al
	SVTS A 04-U-A-04/24	28	24	4	-	25	63.5	12.5	11.5	Al
	SVTS A 04-U-A-04/16	20	16	-	4	25	63.5	12.5	11.5	Al
	SVTS A 04-U-A-00/46	46	46	-	-	25	76.5	12.5	11.5	Al
	SVTS A 04-U-A-00/56	56	56	-	-	25	89.5	12.5	11.5	Al
	SVTS A 04-U-A-04/44	48	44	4	-	25	89.5	12.5	11.5	Al
	SVTS A 04-U-A-04/36	40	36	-	4	25	89.5	12.5	11.5	Al

Ethernet option*

Model	Number of circuits			*L*	Weight (kg)
	Total	Signals	Ethernet		
		2A			
SVTS A 04-S-A-00/24-...-E1M	24	24	100BaseT	51,5	0,10
SVTS A 04-S-A-00/30-...-E1M	30	30	100BaseT	59,5	0,12
SVTS A 04-S-A-00/40-...-E1M	40	40	100BaseT	72,5	0,14
SVTS A 04-S-A-00/50-...-E1M	50	50	100BaseT	85,5	0,16
SVTS A 04-S-A-00/18-...-E1G	18	18	1000BaseT	51,5	0,10
SVTS A 04-S-A-00/24-...-E1G	24	24	1000BaseT	59,5	0,12
SVTS A 04-S-A-00/34-...-E1G	34	34	1000BaseT	72,5	0,14
SVTS A 04-S-A-00/44-...-E1G	44	44	1000BaseT	85,5	0,16

*RJ 45 connectors included

All dimensions in millimeters, unless otherwise specified

Notes

All dimensions in millimeters, unless otherwise specified

SVTS A Series

High current capsule Slip Rings

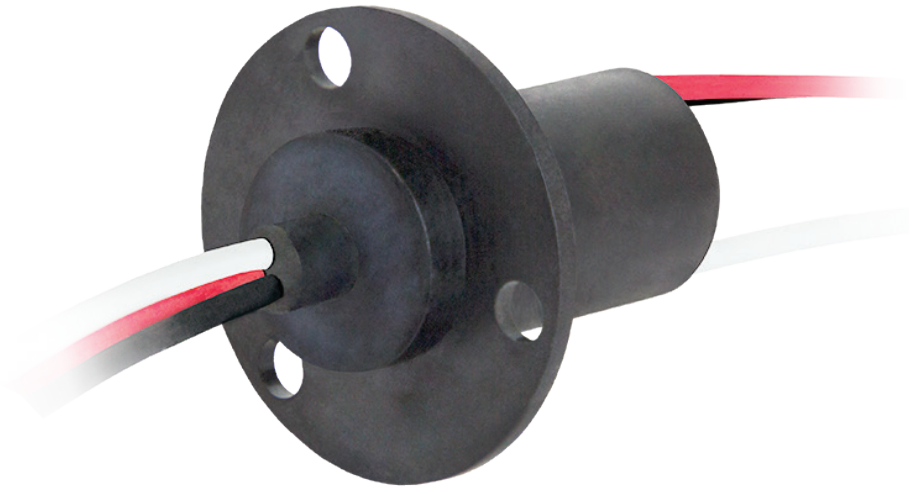

HIGH POWER | COMPACT | COST-EFFECTIVE

The high-current capsule A Series Slip Rings, thanks to their extreme compactness, guarantees a low outer speed between rings and brushes, thus to reduce material consumption so as to enhance its lifetime.
This Series has been designed keeping flexibility, cost-effectiveness and reliability in mind.
Moreover, this Slip Ring family is available in a wide range of configurations, from 3 to 56 circuits.
The gold-gold technology used between rings and brushes, minimise noise and interferences between the rings, allowing high data rate and frequency signal transmission.

In addition, the SVTS A 05 model has been designed to guarantee power circuits in a very small footprint (up to 20 A @ 250 VAC).

Benefits

- High power in little space
- Compact
- Light
- Cost-effective

Main applications

- Wind turbines
- Packaging
- Hose & cable reels
- Control systems
- Packaging
- Moving head projectors
- Medical / pharmaceutical

Product code (go to page 9 for the detailed coding system)

SVTS A 05 - □ - ▭ - ✕✕/⬡⬡ - ◇◇◇◇/✧✧✧✧ - △△ - ☆☆☆

A Series | 05 Model | □ IP grade[1] | ▭ Flange type | ✕ Power circuits | ⬡ Signal circuits

◇ Cable length (brush side) | ✧ Cable length (ring side) | △ Temperature range[2] | ☆ Special options[3]

[1] Only IP51 [S]

[2] Standard [ST]; Extended [ET]

[3] 4A circuits [001]; 8A circuits [002]; 10A circuits [003]; 20A circuits [004]

Features

Current	4A: AWG22 6A: AWG20 8A/10A: AWG16 20A: AWG14
Voltage	240 VDC / 240 VAC
Cables	Tin plated / PTFE insulated / colour coded
Cables length	Standard: 250mm; custom cable length increase possible as multiples of 250mm
Dielectric strength	500 VAC @ 60Hz @ 60 sec
Insulation resistance	> 500 MΩ / 500 VDC
Dynamic contact resistance	< 10 mΩ
Nominal speed	250 rpm
Bearings	Miniature high-precision stainless steel ball bearings
Housing	ABS (hard plastic)
Contact	Gold-gold (alloy)
Temperature	-20°C to +80°C (-40°C as option)
Protection	IP51
Expected lifetime	10^7 revolutions (depending on speed, environmental conditions and size)

Combinations

Electric	Fluidic (combined solutions)
Power	Air
	Oil
	Water

Customizations

Cables	Mechanical design	Flange
Materials		

SVTS A 05

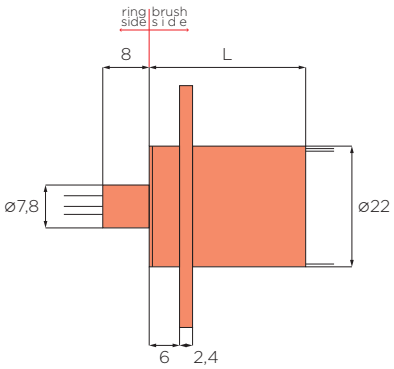

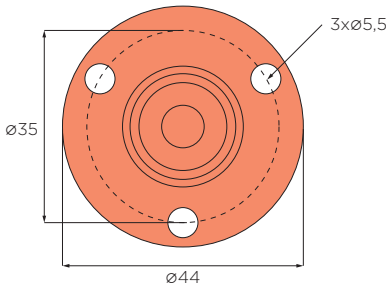

See page 26 for different flange options
Custom cable length increase possible as multiples of 250mm

Model	Number of circuits					Dimensions		Housing
	Total	Power				Outside ø	*L*	
		4A	8A	10A	20A			
SVTS A 05-S-A-03/00-...-001	3	3	-	-	-	22	21	ABS
SVTS A 05-S-A-03/00-...-002	3	-	3	-	-	22	29	ABS
SVTS A 05-S-A-03/00-...-003	3	-	-	3	-	22	35	ABS
SVTS A 05-S-A-03/00-...-004	3	-	-	-	3	22	43	ABS

All dimensions in millimeters, unless otherwise specified

Notes

All dimensions in millimeters, unless otherwise specified

SVTS A Series

Radio frequency capsule Slip Rings

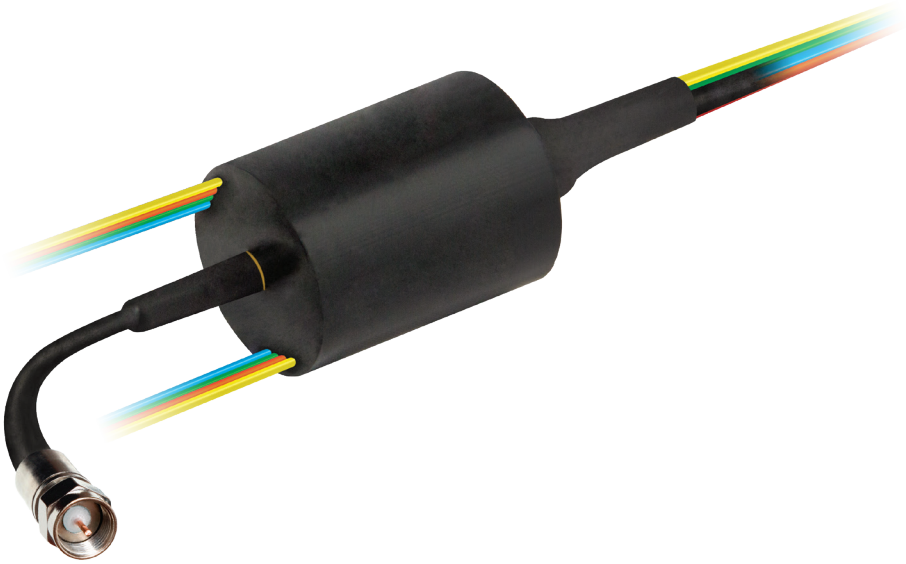

HI-DEF VIDEO TRANSMISSION | COMPACT | HIGH CIRCUITS DENSITY

The radio frequency A Series Slip Rings are used to transfer up to 24 electrical signals from a stationary to a rotating structure, in conjunction with an RF channel.

The RF channel can transfer up to 3 GHz. Designed specifically for transferring high definition video signals (1080p / 3G-SDI o 1080i/HD-SDI), this series can fit RG178, RG316 and RG174 type coaxial cables.

Benefits

- RF coaxial connection
- High definition video transmission
- Optimal signal transmission (gold-gold technology)
- Compact
- Light
- High circuits density
- Combinable with fluidic rotary joints and FORJ
- Cost-effective

Main applications

- RF systems
- High definition video systems / CCTV
- Optical heads

Product code (go to page 9 for the detailed coding system)

SVTS A 06 - □ - ▭ - ✕✕/⬡⬡ - ◇◇◇◇/✧✧✧✧ - △△ - ☆☆☆

A Series | 06 Model | □ IP grade[1] | ▭ Flange type | ✕ Power circuits | ⬡ Signal circuits

◇ Cable length (brush side) | ✧ Cable length (ring side) | △ Temperature range[2] | ☆ Special options[3]

[1] Only IP51 [S]

[2] Standard [ST]; Extended [ET]

[3] RG174 [01*]; RG316 [02*]; RG178 [03*]; RG179 [04*]; MMCX [**1]; SMA [**2]; SMB [**3]; MCX [**4]; BNC [**5]

Features

Speed	100 rpm
Temperature	-20°C +80°C (-40°C as option)
Contact	Gold-gold (alloy)
Bearings	Miniature high-precision stainless steel ball bearings
Housing	ABS (hard plastic)
Connector	MMCX, SMA, SMB, MCX, BNC
Cable	RG174, RG136, RG178, RG179

Combinations

Electric

Signals

Video

Customizations

Cables	Mechanical design	Flange
Materials		

SVTS A 06

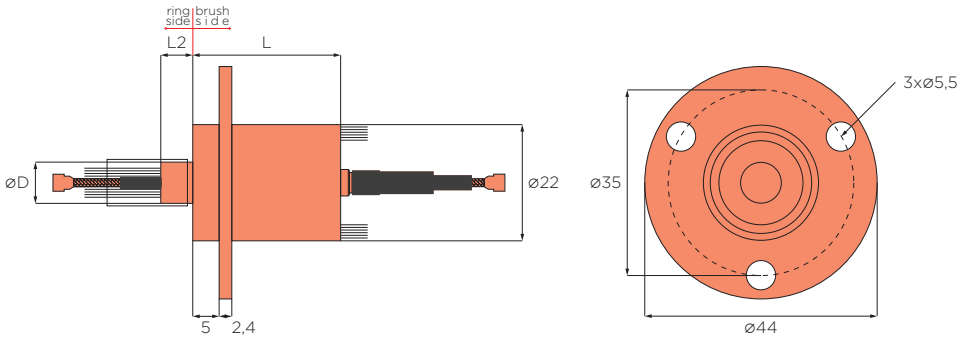

See page 26 for different flange options
Custom cable length increase possible as multiples of 250mm

Model	Number of circuits		Dimensions			
	Total	Signals	Outside ø	*D*	*L1*	*L2*
		2A				
SVTS A 06-S-A-00/08	8	8	22	8	24	6
SVTS A 06-S-A-00/12	12	12	22	8	28	6
SVTS A 06-S-A-00/18	18	18	22	8,8	38	6,8
SVTS A 06-S-A-00/24	24	24	22	12	43	8,2

All dimensions in millimeters, unless otherwise specified

Notes

All dimensions in millimeters, unless otherwise specified

Flange types

SVTS A 01

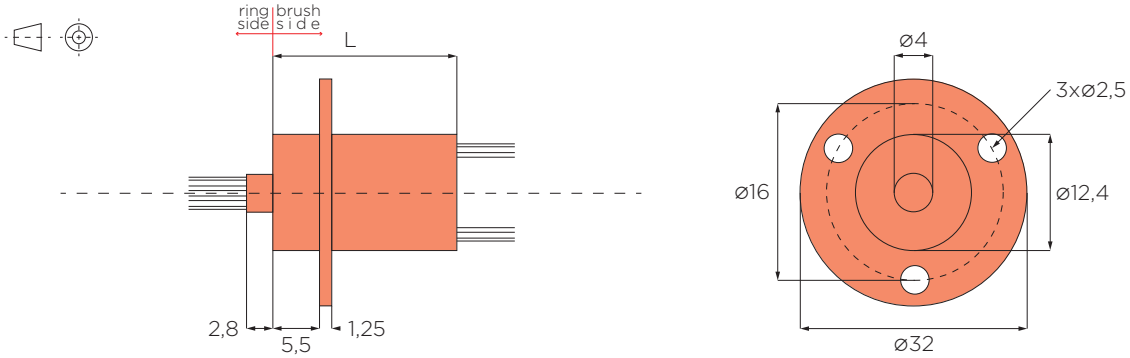

A FLANGE (STANDARD)

SVTS A 01

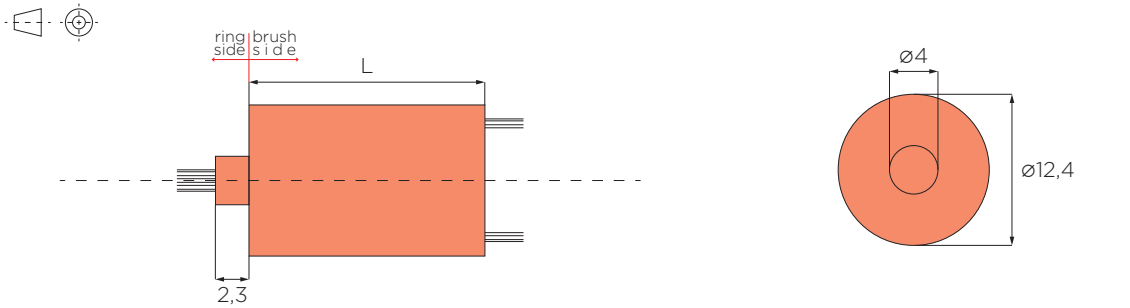

B FLANGE

SVTS A 01

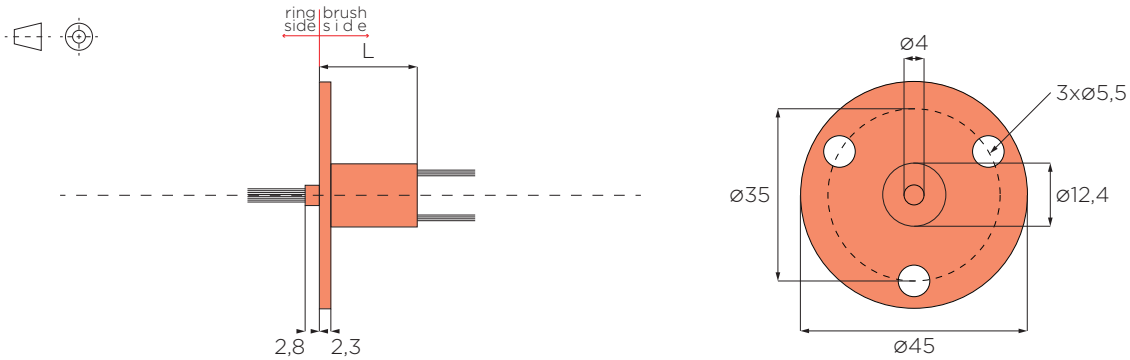

C FLANGE

SVTS A 01

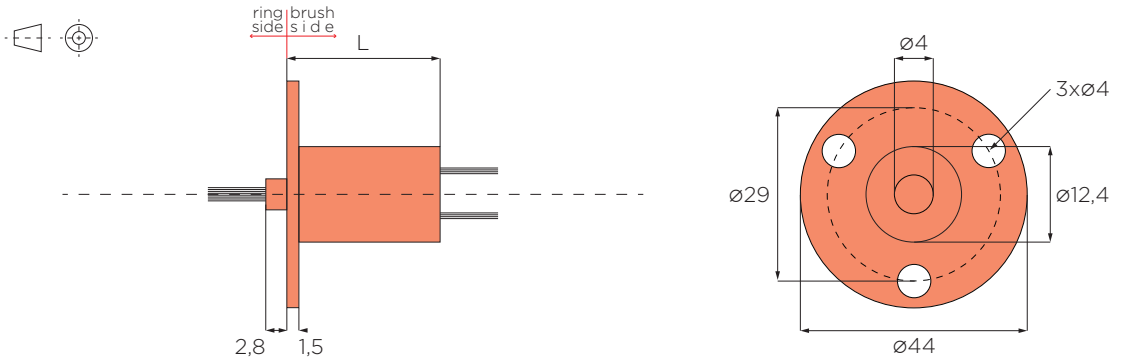

D FLANGE

All dimensions in millimeters, unless otherwise specified

SVTS A 01

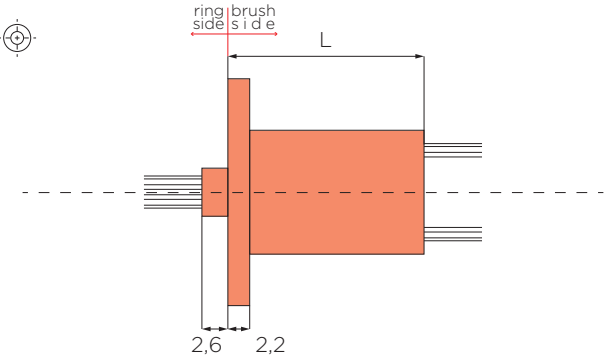

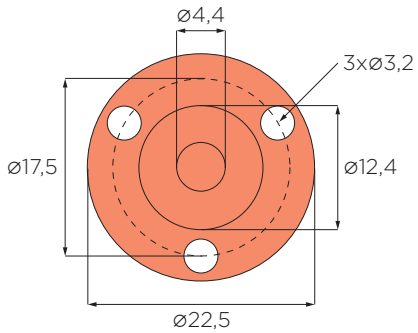

E FLANGE

SVTS A 01

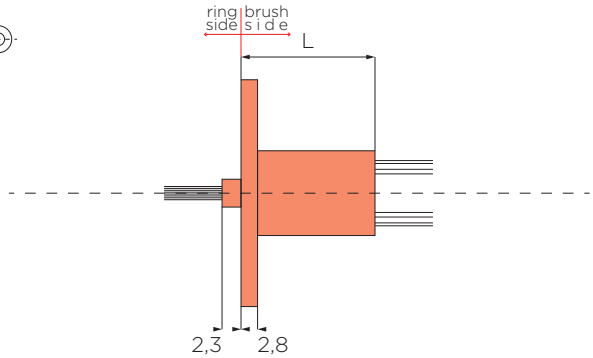

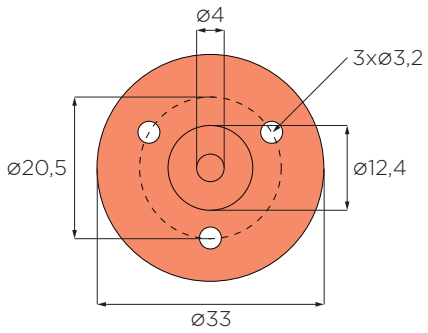

F FLANGE

SVTS A 02

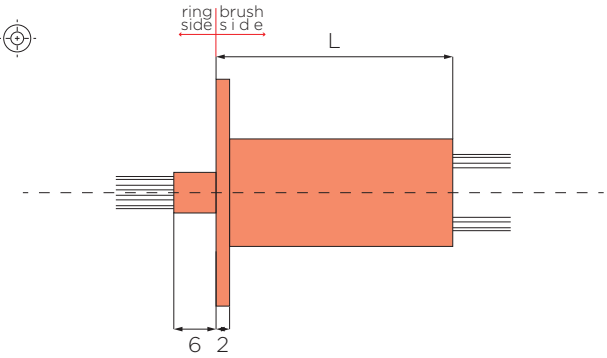

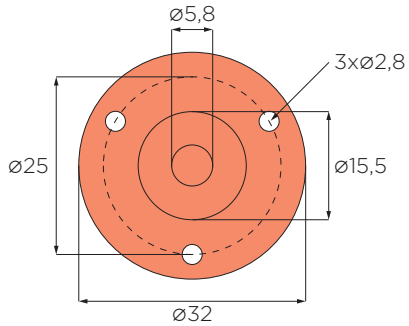

A FLANGE (STANDARD)

SVTS A 02

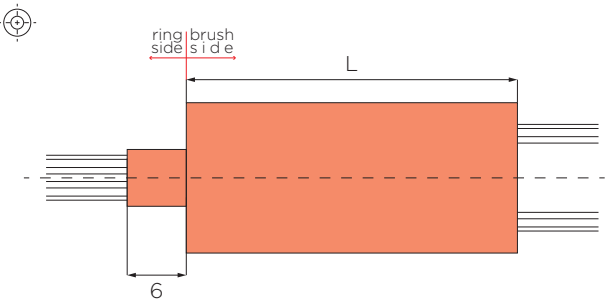

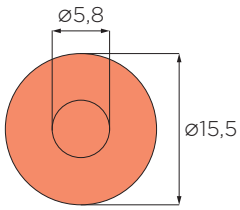

B FLANGE

SVTS A 03

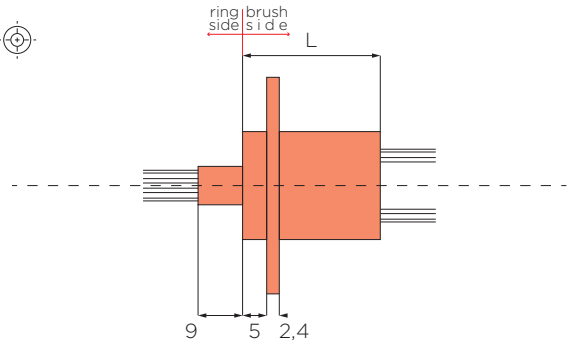

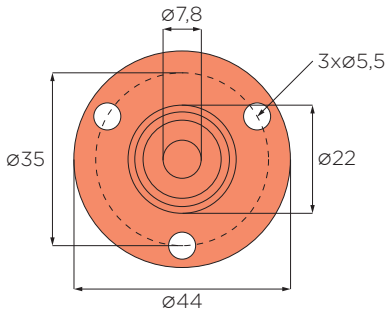

A FLANGE (STANDARD)

All dimensions in millimeters, unless otherwise specified

SVTS A 03

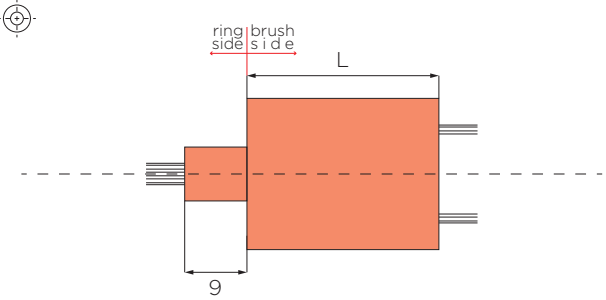

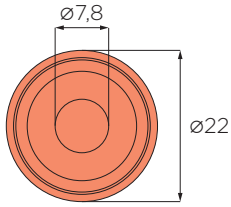

B FLANGE

SVTS A 03

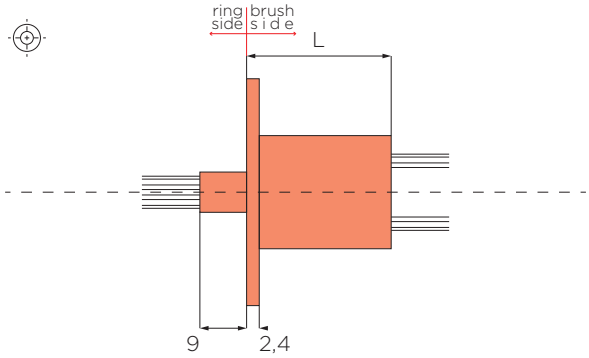

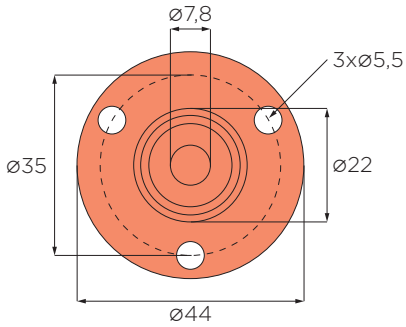

C FLANGE

SVTS A 03

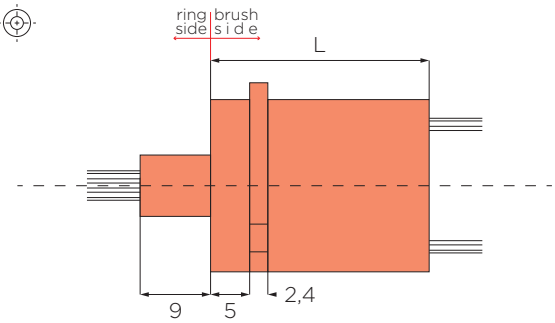

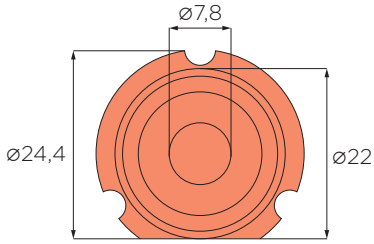

D FLANGE

SVTS A 04

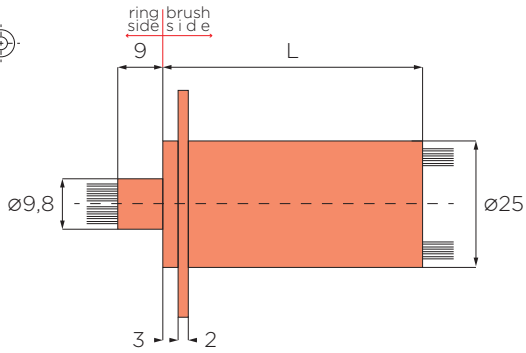

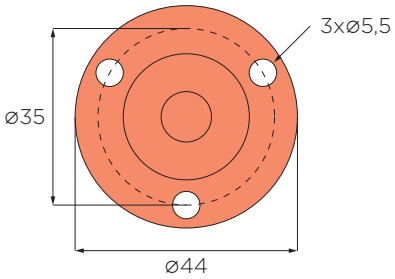

A FLANGE (STANDARD)

SVTS A 04

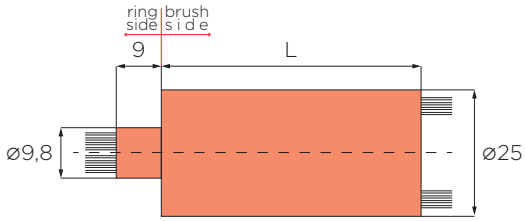

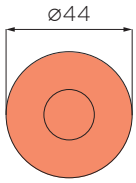

B FLANGE

All dimensions in millimeters, unless otherwise specified

SVTS A 05

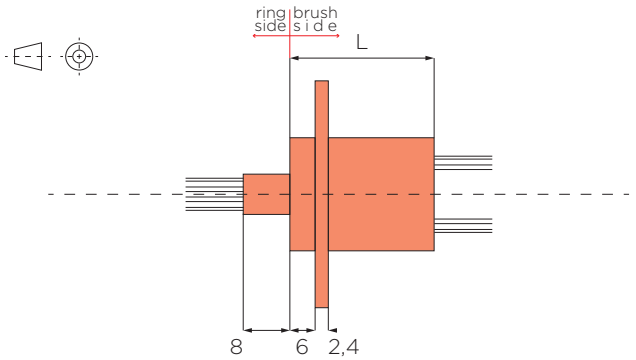

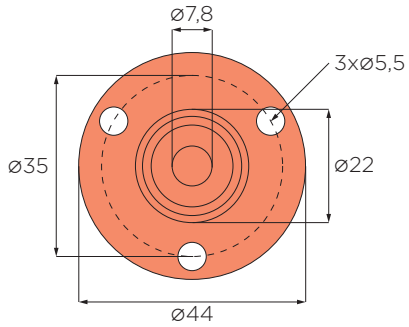

A FLANGE (STANDARD)

SVTS A 05

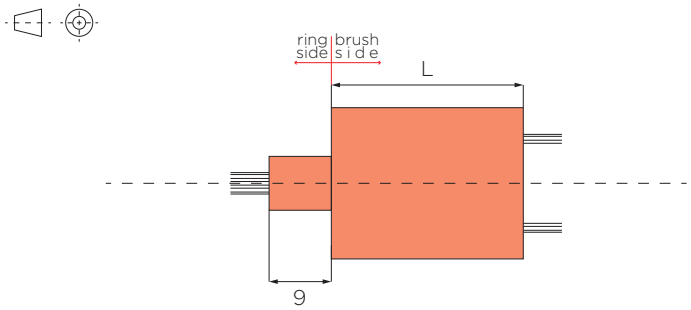

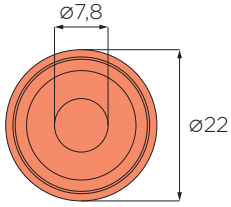

B FLANGE

SVTS A 06

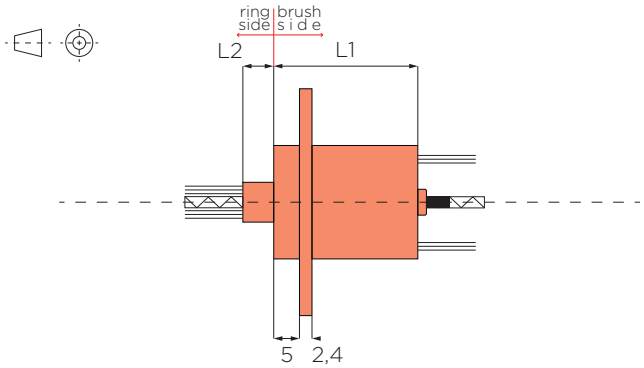

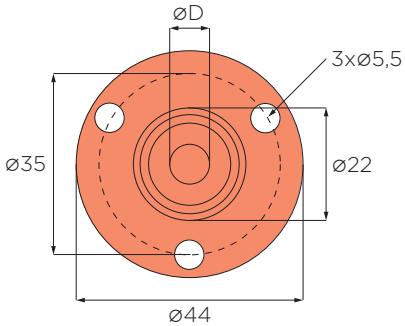

A FLANGE (STANDARD)

SVTS A 06

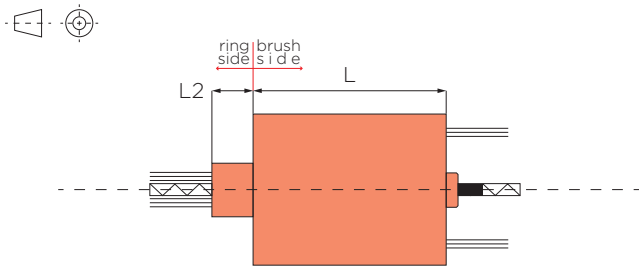

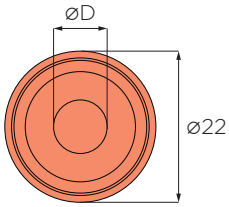

B FLANGE

SVTS A 06

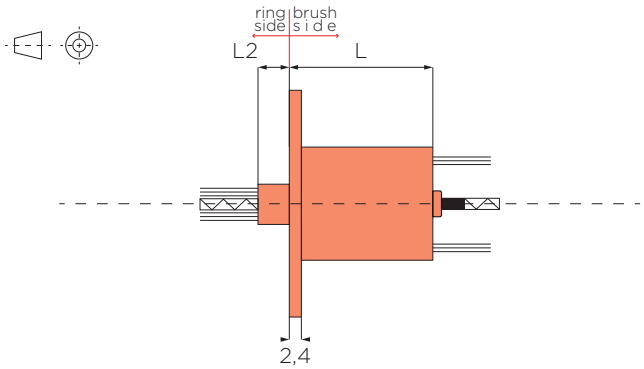

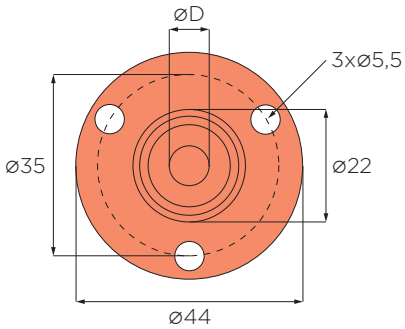

C FLANGE

All dimensions in millimeters, unless otherwise specified

SVTS B Series

Terminals Slip Rings

Contents

Model	Out ⌀	Page
SVTS B 01	32mm	34
SVTS B 02	45mm	34
SVTS B 03	77mm	35

SVTS B Series

Terminals Slip Rings

LONG-LIFE | IP 65 | POWER & SIGNALS

The most compact solution with fibre brush technology.
Thanks to the multiple contact points, the Terminals B Series Slip Rings ensures longer life due to the low contact wear rates, while granting low contact resistance.
Specially designed for intensive use at high speed and to transmit power and sensitive signals, like thermocouple ones, these rotary joints are particularly suitable for use on flowpack packaging machines ensuring a compact and reliable solution; the use of terminals type connectors avoids the use of welds that may affect the reading of thermocouple signals.
Moreover, the IP65 version makes it washable, delivering protection against low pressure jets if watered from all directions.

Benefits

- Electrical power & signals in one unit
- Compact
- Long lifetime
- Easy connection (Faston connectors)
- Cost-effective
- Water resistant (IP65)*

Main applications

Flowpack machines	Process control
Hose & cable reels	Rotating tables
Medical / pharmaceutical	Converting
Packaging	Wind turbines

*Optional

Product code (go to page 9 for the detailed coding system)

SVTS B ⬠⬠ - □ - ▭ - ✕✕ / ⬡⬡ - ◇◇◇◇ / ✧✧✧✧ - △△ - ☆☆☆

B Series | Model | IP grade[1] | Flange type | Power circuits | Signal circuits

Cable length (brush side) | Cable length (ring side) | Temperature range[2] | Special options

[1] IP51 [S]; IP65 [U]

[2] Only Standard [ST]; Extended [ET]

Features

Current	SVTS B 01: 400 VAC / 400 VDC power circuits SVTS B 02: 400 VAC / 400 VDC
Dielectric voltage strenth	500 VAC @ 60 Hz @ 60 sec
Insulation resistance	> 1000 MΩ / 500 VDC
Dynamic contact resistance	< 10 mΩ
Nominal speed	400 rpm (higher speeds, up to 600 rpm, upon request)
Bearings	High-precision stainless steel ball bearings
Housing	ABS (hard plastic)
Contact	Gold-gold (alloy)
Temperature	-20°C to +80°C
Protection	IP51; IP65*
Expected lifetime	10^8 revolutions (depending on speed, environmental conditions and size)

*Optional

Combinations

Electric

Signals

Power

Customizations

Cables	Mechanical design	Materials

SVTS B 01

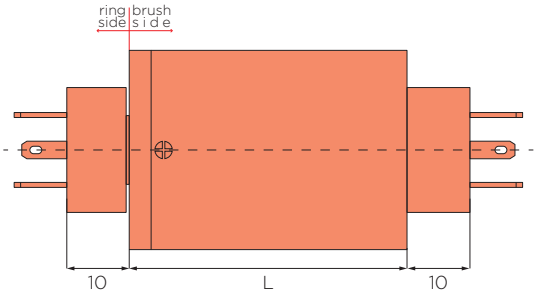

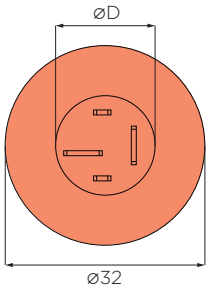

	Model	Number of circuits					Dimensions		Terminals	
		Total	Power		Signals		*D*	*L*	Fastons	
			14A	20A	2A	5A			Power	Signals
	SVTS B 01	2	2	-	-	-	16	28	0.8x6.3	-
	SVTS B 01-S-A-03/00	3	3	-	-	-	16	28	0.8x6.3	-
	SVTS B 01-S-A-02/02	4	2	-	2	-	16	28	0.8x6.3	0.8x2.8
IP65	SVTS B 01-U-A-02/00	2	-	2	-	-	20	44,5	0.8x6.3	0.8x2.8
	SVTS B 01-U-A-03/00	3	-	3	-	-	20	44,5	0.8x6.3	0.8x2.8
	SVTS B 01-U-A-02/02	4	-	2	-	2	20	44,5	0.8x6.3	0.8x2.8
	SVTS B 01-U-A-02/03	5	-	2	-	3	20	44,5	0.8x6.3	0.8x2.8

SVTS B 02

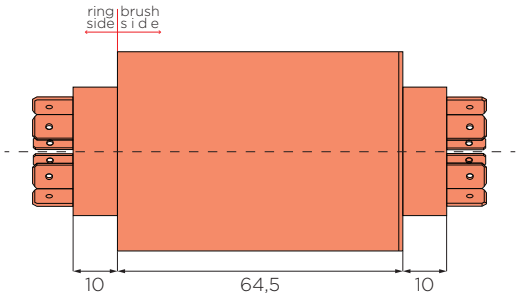

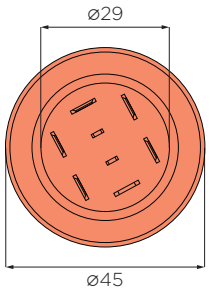

Model	Number of circuits					Terminals	
	Total	Power		Signals		Fastons	
		14A	20A	2A	5A	Power	Signals
SVTS B 02-S-A-06/00	6	-	6	-	-	0.8x6.3	-
SVTS B 02-S-A-06/02	8	-	6	-	2	0.8x6.3	0.8x2.8

All dimensions in millimeters, unless otherwise specified

SVTS B 03

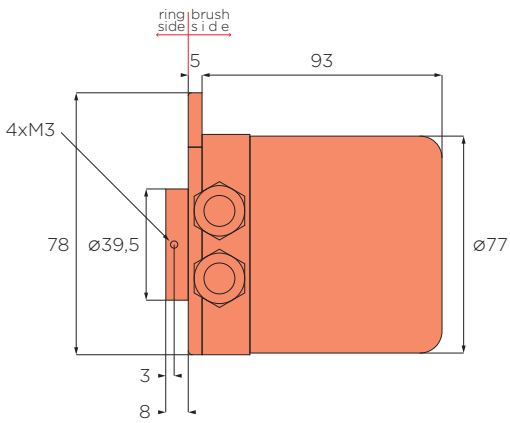

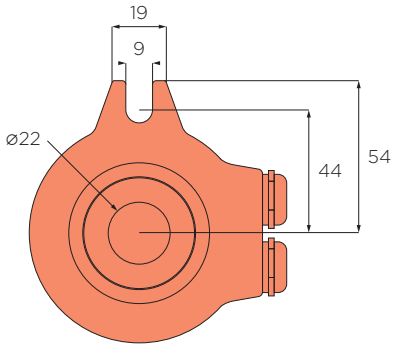

IP65 once installed

Model	Number of circuits			Terminals
	Total	Power		Screw connections
		20A	2A	
SVTS B 03-U-A-02/00	2	2	-	2xM5
SVTS B 03-U-A-03/00	3	3	-	3xM5
SVTS B 03-U-A-02/02	4	2	2	4xM5
SVTS B 03-U-A-03/02	5	3	2	5xM5

Notes

All dimensions in millimeters, unless otherwise specified

SVTS C Series

Through-bore Slip Rings

Contents

Model	In ⌀	Out ⌀	Page
SVTS C 01	3mm	17mm	40
SVTS C 02	4,5mm	22mm	40
SVTS C 03	12,7mm	54mm	41
SVTS C 04	25,4mm	78mm	41
SVTS C 05	38,1mm	99mm	42
SVTS C 05 - Ethernet	38,1mm	99mm	42
SVTS C 05 - Single pneumatic passage	-	99mm	43
SVTS C 06	50mm	120mm	44
SVTS C 07	60mm	135mm	45
SVTS C 08	70mm	155mm	46
SVTS C 09	80mm	180mm	47
SVTS C 10	90mm	190mm	48
SVTS C 11	100mm	203mm	49

SVTS C Series

Through-bore Slip Rings

THROUGH-BORE | MANY CUSTOMISATIONS | POWER, SIGNALS & FIELDBUS

The hollow shaft Slip Rings C Series provides an economical readily available solution when a compact through-bore configuration is required to be easily mounted on the customers' mechanics. Available in a wide range of sizes and models starting from 3 mm up to over 100 mm through-bore diameter. The use of fibre brush technology and the ability to use gold-gold technology for signal circuits ensure long life and low electrical noise allowing high data rate field bus transmission. The extreme flexibility of the C series rotary joints also makes it possible to customise configurations, such as for the use of special cables or connectors, at customer's request.

Benefits

- Transmission of electric power/signals and fieldbuses in one unit
- Mountable on the shaft
- Many sizes
- Many customisations
- Combinable with fluidic rotary joints and FORJ
- Cost-effective

Main applications

Packaging	Machine tools
Automatic machines	Rotary tables
Filling machines	Robots
Capping machines	Palletisers
Labelling machines	Medical / pharmaceutical
Converting machines	Cable reels

Product code (go to page 9 for the detailed coding system)

SVTS C ⬠⬠ - □ - ▭ - ✕✕ / ⬡⬡ - ◇◇◇◇ / ✧✧✧✧ - △△ - ☆☆☆

C Series | Model | IP grade[1] | Flange type | Power circuits | Signal circuits

Cable length (brush side) | Cable length (ring side) | Temperature range[2] | Special options[3]

[1] IP51 [S]; IP54 [T]; IP65 [U]

[2] Standard [ST]; Extended [ET]

[3] Pneumatic Ø6mm [OP1]; pneumatic Ø10mm [OP2]; Ethernet 100BaseT [E1M]; Ethernet 1000BaseT [E1G]

Features

Current	
Power	10A: AWG16 15A: AWG14 20A:AWG14
Signals	2A: AWG26 5A: AWG22
Voltage	
Power	600 VAC / 600 VDC
Signals	240 VAC / 240 VDC
Cables	Tin plated (power circuits); silver plated (signal circuits) PTFE insulated / colour coded
Cables length	Standard: 500mm*; custom cable length increase possible as multiples of 500mm*
Insulation resistance	
Power	> 1000 MΩ / 500 VDC
Signals	> 500 MΩ / 500 VDC
Dynamic contact resistance	< 0,01 Ω
Bearings	Steel
Housing	ABS (hard plastic)
Temperature	-20°C / +80°C (-40°C as option)
Protection	IP51 (IP54 and IP65 as option)
Expected lifetime	10^8 revolutions** (depending on speed, environmental conditions and size)

*SVTS C 01, SVTS C 02: 250mm **SVTS C01, SVTS C 02: 10^7 revolutions

Combinations

Electric	Fieldbus	Fluidic (combined solutions)
Signals	Ethernet	Air
	Profinet	Oil
	Canbus	Gas
	RS 232	Water

Customizations

Cables	Mechanical design	Flange
Materials	Treatments	Cable exits

SVTS C 01

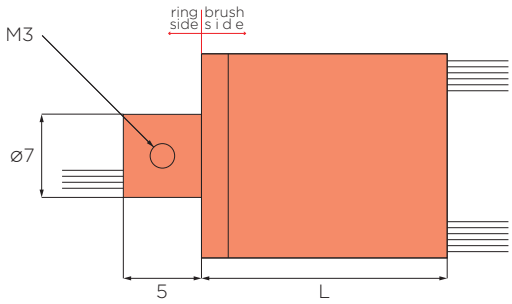

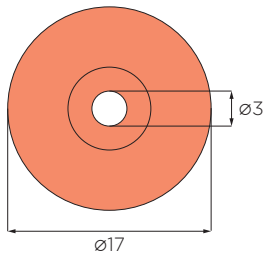

Custom cable length increase possible as multiples of 250mm

Model	Number of circuits			L
	Total	Power	Signals	
			2A	
SVTS C 01-S-A-00/02	2	-	2	13,3
SVTS C 01-S-A-00/03	3	-	3	21
SVTS C 01-S-A-00/06	6	-	6	21
SVTS C 01-S-A-00/08	8	-	8	21

SVTS C 02

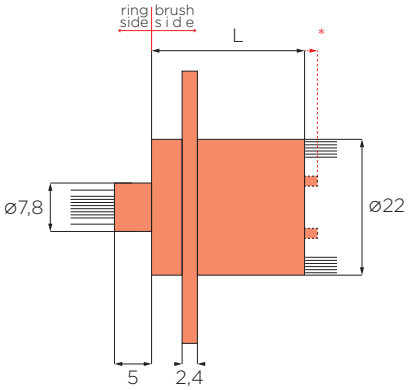

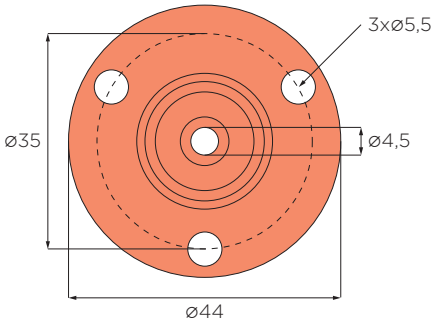

* SVTS C 02-S-A-00/12
Custom cable length increase possible as multiples of 250mm

Model	Number of circuits			L
	Total	Power	Signals	
			2A	
SVTS C 02-S-A-00/02	2	-	2	19,4
SVTS C 02-S-A-00/06	6	-	6	19,4
SVTS C 02-S-A-00/08	8	-	8	19,4
SVTS C 02-S-A-00/12	12	-	12	26,6 *

All dimensions in millimeters, unless otherwise specified

SVTS C 03

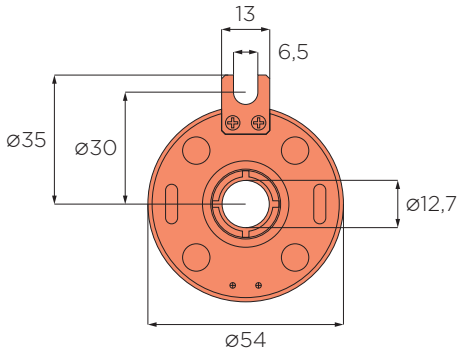

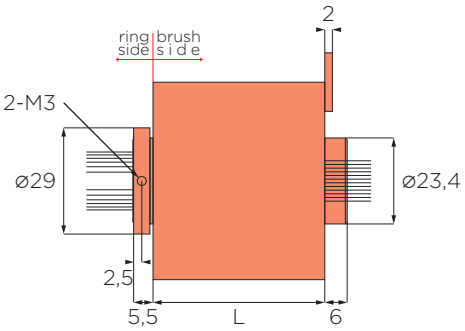

Custom cable length increase possible as multiples of 500mm

Model	Number of circuits			L	
	Total	Power	Signals	IP51	IP65
			5A		
SVTS C 03-X-A-00/06	6	-	6	33.5	37.5
SVTS C 03-X-A-00/12	12	-	12	47.5	51.5
SVTS C 03-X-A-00/18	18	-	18	61.5	64.5
SVTS C 03-X-A-00/24	24	-	24	75.5	79.5

SVTS C 04

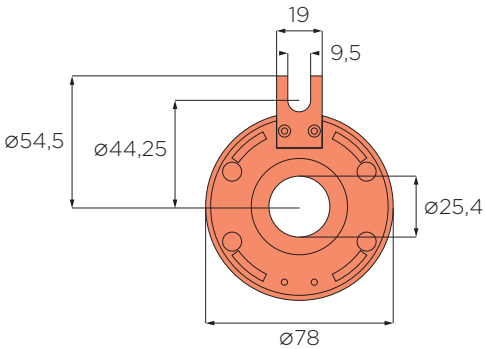

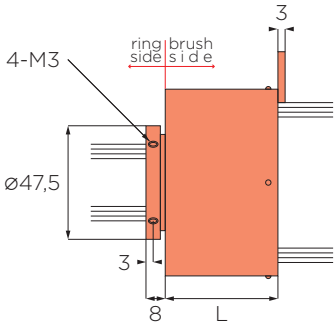

Custom cable length increase possible as multiples of 500mm

Model	Number of circuits			L	
	Total	Power	Signals	IP51	IP65
		15A	2A		
SVTS C 04-X-A-06/00	6	6	-	47	62
SVTS C 04-X-A-00/12	12	-	12	47	62
SVTS C 04-X-A-12/00	12	12	-	71	86
SVTS C 04-X-A-06/12	18	6	12	71	86
SVTS C 04-X-A-00/24	24	-	24	71	86
SVTS C 04-X-A-18/00	18	18	-	95	110
SVTS C 04-X-A-12/12	24	12	12	95	110
SVTS C 04-X-A-06/24	30	6	24	95	110
SVTS C 04-X-A-00/36	36	-	36	95	110
SVTS C 04-X-A-24/00	24	24	-	119	134
SVTS C 04-X-A-18/12	30	18	12	119	134
SVTS C 04-X-A-12/24	36	12	24	119	134
SVTS C 04-X-A-06/36	42	6	36	119	134
SVTS C 04-X-A-00/48	48	-	48	119	134

All dimensions in millimeters, unless otherwise specified

SVTS C 05

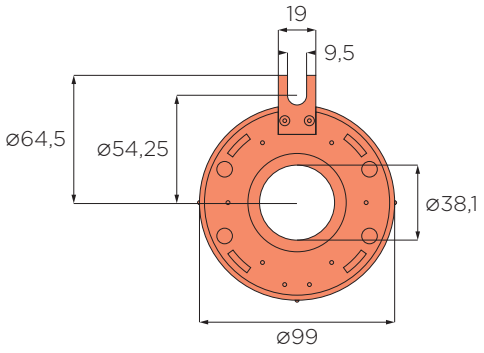

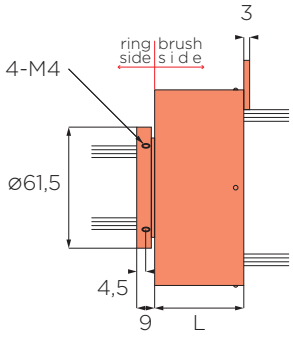

Custom cable length increase possible as multiples of 500mm

Model	Number of circuits			*L*	
	Total	Power	Signals	IP51	IP65
		15A	2A		
SVTS C 05-X-A-06/00	6	6	-	45.2	65.2
SVTS C 05-X-A-00/12	12	-	12	45.2	65.2
SVTS C 05-X-A-12/00	12	12	-	69.2	89.2
SVTS C 05-X-A-06/12	18	6	12	69.2	89.2
SVTS C 05-X-A-00/24	24	-	24	69.2	89.2
SVTS C 05-X-A-18/00	18	18	-	93.2	113.2
SVTS C 05-X-A-12/12	24	12	12	93.2	113.2
SVTS C 05-X-A-06/24	30	6	24	93.2	113.2
SVTS C 05-X-A-00/36	36	-	36	93.2	113.2
SVTS C 05-X-A-24/00	24	24	-	117.2	137.2
SVTS C 05-X-A-18/12	30	18	12	117.2	137.2
SVTS C 05-X-A-12/24	36	12	24	117.2	137.2
SVTS C 05-X-A-06/36	42	6	36	117.2	137.2
SVTS C 05-X-A-00/48	48	-	48	117.2	137.2

Ethernet option*

Model	Number of circuits			*L*	
	Total	Power	Ethernet	IP51	IP65
		15A			
SVTS C 05-X-A-00/00-...-E1M	5	-	100BaseT	45.2	65.2
SVTS C 05-X-A-06/00-...-E1M	11	6	100BaseT	69.2	89.2
SVTS C 05-X-A-12/00-...-E1M	17	12	100BaseT	93.2	113.2
SVTS C 05-X-A-18/00-...-E1M	23	18	100BaseT	117.2	137.2
SVTS C 05-X-A-00/00-...-E1G	9	-	1000BaseT	69.2	89.2
SVTS C 05-X-A-06/00-...-E1G	15	6	1000BaseT	93.2	113.2
SVTS C 05-X-A-12/00-...-E1G	21	12	1000BaseT	117.2	137.2

*CAT5e Ethernet cable and CAT6 RJ45 connectors included

All dimensions in millimeters, unless otherwise specified

SVTS C 05

Single pneumatic passage option

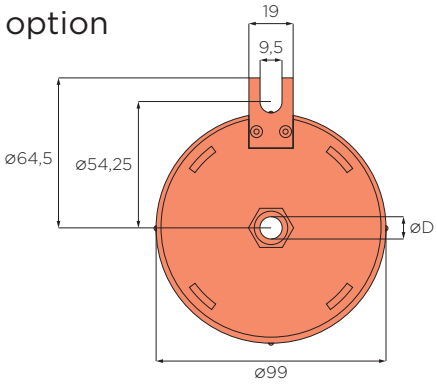

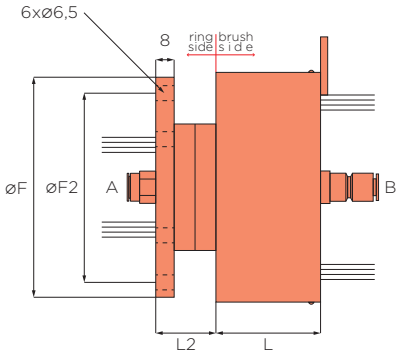

Custom cable length increase possible as multiples of 500mm

Model	N. of circuits		Dimensions								
	Power	Signal	*L*		*L2*		*D*	*F*		*F2*	
	15A	2A	IP51	IP65	IP51	IP65	*(pneumatic passage)*	IP 51	IP65	IP51	IP65
SVTS C 05-X-A-06/00-...-0P1	6	-	45	65	26	14	6	95	130	81	116
SVTS C 05-X-A-00/12-...-0P1	-	12	45	65	26	14	6	95	130	81	116
SVTS C 05-X-A-12/00-...-0P1	12	-	69	89	26	14	6	95	130	81	116
SVTS C 05-X-A-06/12-...-0P1	6	12	69	89	26	14	6	95	130	81	116
SVTS C 05-X-A-00/24-...-0P1	-	24	69	89	26	14	6	95	130	81	116
SVTS C 05-X-A-18/00-...-0P1	18	-	93	113	26	14	6	95	130	81	116
SVTS C 05-X-A-12/12-...-0P1	12	12	93	113	26	14	6	95	130	81	116
SVTS C 05-X-A-06/24-...-0P1	6	24	93	113	26	14	6	95	130	81	116
SVTS C 05-X-A-00/36-...-0P1	0	36	93	113	26	14	6	95	130	81	116
SVTS C 05-X-A-24/00-...-0P1	24	-	117,5	137,5	26	14	6	95	130	81	116
SVTS C 05-X-A-18/12-...-0P1	18	12	117,5	137,5	26	14	6	95	130	81	116
SVTS C 05-X-A-12/24-...-0P1	12	24	117,5	137,5	26	14	6	95	130	81	116
SVTS C 05-X-A-06/36-...-0P1	6	36	117,5	137,5	26	14	6	95	130	81	116
SVTS C 05-X-A-00/48-...-0P1	-	48	117,5	137,5	26	14	6	95	130	81	116
SVTS C 05-X-A-06/00-...-0P2	6	-	45	65	26	14	10	95	130	81	116
SVTS C 05-X-A-00/12-...-0P1	-	12	45	65	26	14	10	95	130	81	116
SVTS C 05-X-A-12/00-...-0P2	12	-	69	89	26	14	10	95	130	81	116
SVTS C 05-X-A-06/12-...-0P2	6	12	69	89	26	14	10	95	130	81	116
SVTS C 05-X-A-00/24-...-0P2	-	24	69	89	26	14	10	95	130	81	116
SVTS C 05-X-A-18/00-...-0P2	18	-	93	113	26	14	10	95	130	81	116
SVTS C 05-X-A-12/12-...-0P2	12	12	93	113	26	14	10	95	130	81	116
SVTS C 05-X-A-06/24-...-0P2	6	24	93	113	26	14	10	95	130	81	116
SVTS C 05-X-A-00/36-...-0P2	-	36	93	113	26	14	10	95	130	81	116
SVTS C 05-X-A-24/00-...-0P2	24	-	117,5	137,5	26	14	10	95	130	81	116
SVTS C 05-X-A-18/12-...-0P2	18	12	117,5	137,5	26	14	10	95	130	81	116
SVTS C 05-X-A-12/24-...-0P2	12	24	117,5	137,5	26	14	10	95	130	81	116
SVTS C 05-X-A-06/36-...-0P2	6	36	117,5	137,5	26	14	10	95	130	81	116
SVTS C 05-X-A-00/48-...-0P2	-	48	117,5	137,5	26	14	10	95	130	81	116

All dimensions in millimeters, unless otherwise specified

SVTS C 06

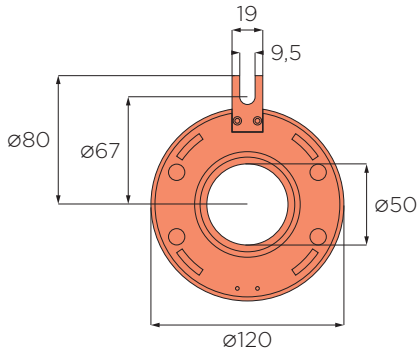

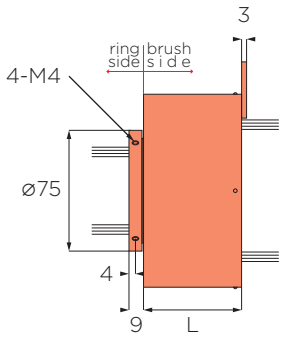

Custom cable length increase possible as multiples of 500mm

Model	Number of circuits			*L*	
	Total	Power	Signals	IP51	IP65
		20A	5A		
SVTS C 06-X-A-06/00	6	6	-	60.5	81.5
SVTS C 06-X-A-00/12	12	-	12	60.5	81.5
SVTS C 06-X-A-12/00	12	12	-	90.5	111.5
SVTS C 06-X-A-06/12	18	6	12	90.5	111.5
SVTS C 06-X-A-00/24	24	-	24	90.5	111.5
SVTS C 06-X-A-18/00	18	18	-	120.5	141.5
SVTS C 06-X-A-12/12	24	12	12	120.5	141.5
SVTS C 06-X-A-06/24	30	6	24	120.5	141.5
SVTS C 06-X-A-00/36	36	-	36	120.5	141.5
SVTS C 06-X-A-24/00	24	24	-	150.5	171.5
SVTS C 06-X-A-18/12	30	18	12	150.5	171.5
SVTS C 06-X-A-12/24	36	12	24	150.5	171.5
SVTS C 06-X-A-06/36	42	6	36	150.5	171.5
SVTS C 06-X-A-00/48	48	-	48	150.5	171.5
SVTS C 06-X-A-30/00	30	30	-	180.5	201.5
SVTS C 06-X-A-24/12	36	24	12	180.5	201.5
SVTS C 06-X-A-18/24	42	18	24	180.5	201.5
SVTS C 06-X-A-12/36	48	12	36	180.5	201.5
SVTS C 06-X-A-06/48	54	6	48	180.5	201.5
SVTS C 06-X-A-00/60	60	-	60	180.5	201.5
SVTS C 06-X-A-36/00	36	36	-	210.5	231.5
SVTS C 06-X-A-30/12	42	30	12	210.5	231.5
SVTS C 06-X-A-24/24	48	24	24	210.5	231.5
SVTS C 06-X-A-18/36	54	18	36	210.5	231.5
SVTS C 06-X-A-12/48	60	12	48	210.5	231.5
SVTS C 06-X-A-06/60	66	6	60	210.5	231.5
SVTS C 06-X-A-18/36	54	18	36	210.5	231.5
SVTS C 06-X-A-12/48	60	12	48	210.5	231.5
SVTS C 06-X-A-06/60	66	6	60	210.5	231.5
SVTS C 06-X-A-00/72	72	-	72	210.5	231.5

All dimensions in millimeters, unless otherwise specified

SVTS C 07

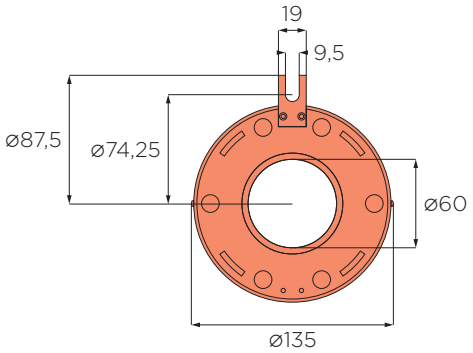

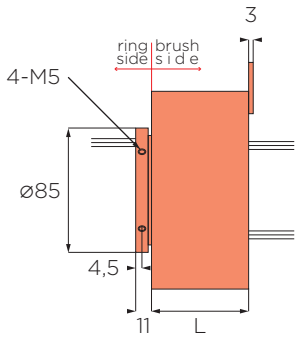

Custom cable length increase possible as multiples of 500mm

Model	Number of circuits			L	
	Total	Power	Signals	IP51	IP65
		20A	5A		
SVTS C 07-X-A-06/00	6	6	-	66.5	80.5
SVTS C 07-X-A-00/12	12	-	12	66.5	80.5
SVTS C 07-X-A-12/00	12	12	-	96.5	110.5
SVTS C 07-X-A-06/12	18	6	12	96.5	110.5
SVTS C 07-X-A-00/24	24	-	24	96.5	110.5
SVTS C 07-X-A-18/00	18	18	-	126.5	140.5
SVTS C 07-X-A-12/12	24	12	12	126.5	140.5
SVTS C 07-X-A-06/24	30	6	24	126.5	140.5
SVTS C 07-X-A-00/36	36	-	36	126.5	140.5
SVTS C 07-X-A-24/00	24	24	-	156.5	170.5
SVTS C 07-X-A-18/12	30	18	12	156.5	170.5
SVTS C 07-X-A-12/24	36	12	24	156.5	170.5
SVTS C 07-X-A-06/36	42	6	36	156.5	170.5
SVTS C 07-X-A-00/48	48	-	48	156.5	170.5
SVTS C 07-X-A-30/00	30	30	-	186.5	200.5
SVTS C 07-X-A-24/12	36	24	12	186.5	200.5
SVTS C 07-X-A-18/24	42	18	24	186.5	200.5
SVTS C 07-X-A-12/36	48	12	36	186.5	200.5
SVTS C 07-X-A-06/48	54	6	48	186.5	200.5
SVTS C 07-X-A-00/60	60	-	60	186.5	200.5
SVTS C 07-X-A-36/00	36	36	-	216.5	230.5
SVTS C 07-X-A-30/12	42	30	12	216.5	230.5
SVTS C 07-X-A-24/24	48	24	24	216.5	230.5
SVTS C 07-X-A-18/36	54	18	36	216.5	230.5
SVTS C 07-X-A-12/48	60	12	48	216.5	230.5
SVTS C 07-X-A-06/60	66	6	60	216.5	230.5
SVTS C 07-X-A-00/72	72	-	72	216.5	230.5
SVTS C 07-X-A-42/00	42	42	-	246.5	260.5
SVTS C 07-X-A-36/12	48	36	12	246.5	260.5
SVTS C 07-X-A-30/24	54	30	24	246.5	260.5
SVTS C 07-X-A-24/36	60	24	36	246.5	260.5
SVTS C 07-X-A-18/48	66	18	48	246.5	260.5
SVTS C 07-X-A-12/60	72	12	60	246.5	260.5
SVTS C 07-X-A-06/72	78	6	72	246.5	260.5
SVTS C 07-X-A-00/84	84	-	84	246.5	260.5
SVTS C 07-X-A-48/00	48	48	-	276.5	290.5
SVTS C 07-X-A-42/12	54	42	12	276.5	290.5
SVTS C 07-X-A-36/24	60	36	24	276.5	290.5
SVTS C 07-X-A-30/36	66	30	36	276.5	290.5
SVTS C 07-X-A-24/48	72	24	48	276.5	290.5
SVTS C 07-X-A-18/60	78	18	60	276.5	290.5
SVTS C 07-X-A-12/72	84	12	72	276.5	290.5
SVTS C 07-X-A-06/84	90	6	84	276.5	290.5
SVTS C 07-X-A-00/96	96	-	96	276.5	290.5

SVTS C 08

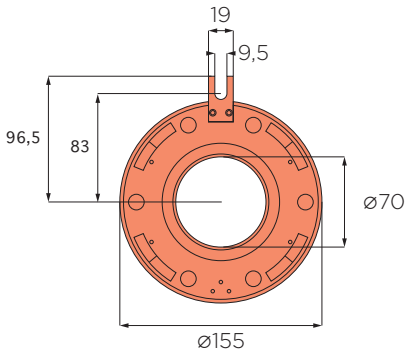

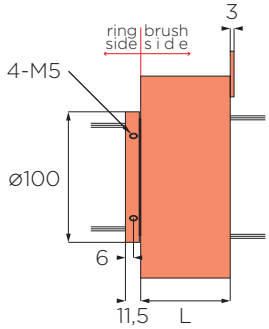

Custom cable length increase possible as multiples of 500mm

Model	Number of circuits			*L*	
	Total	Power	Signals	IP51	IP65
		20A	5A		
SVTS C 08-X-A-06/00	6	6	-	69.3	93.3
SVTS C 08-X-A-00/12	12	-	12	69.3	93.3
SVTS C 08-X-A-12/00	12	12	-	99.3	123.3
SVTS C 08-X-A-06/12	18	6	12	99.3	123.3
SVTS C 08-X-A-00/24	24	-	24	99.3	123.3
SVTS C 08-X-A-18/00	18	18	-	129.3	153.3
SVTS C 08-X-A-12/12	24	12	12	129.3	153.3
SVTS C 08-X-A-06/24	30	6	24	129.3	153.3
SVTS C 08-X-A-00/36	36	-	36	129.3	153.3
SVTS C 08-X-A-24/00	24	24	-	159.3	183.3
SVTS C 08-X-A-18/12	30	18	12	159.3	183.3
SVTS C 08-X-A-12/24	36	12	24	159.3	183.3
SVTS C 08-X-A-06/36	42	6	36	159.3	183.3
SVTS C 08-X-A-00/48	48	-	48	159.3	183.3
SVTS C 08-X-A-30/00	30	30	-	189.3	213.3
SVTS C 08-X-A-24/12	36	24	12	189.3	213.3
SVTS C 08-X-A-18/24	42	18	24	189.3	213.3
SVTS C 08-X-A-12/36	48	12	36	189.3	213.3
SVTS C 08-X-A-06/48	54	6	48	189.3	213.3
SVTS C 08-X-A-00/60	60	-	60	189.3	213.3
SVTS C 08-X-A-36/00	36	36	-	220	244
SVTS C 08-X-A-30/12	42	30	12	220	244
SVTS C 08-X-A-24/24	48	24	24	220	244
SVTS C 08-X-A-18/36	54	18	36	220	244
SVTS C 08-X-A-12/48	60	12	48	220	244
SVTS C 08-X-A-06/60	66	6	60	220	244
SVTS C 08-X-A-00/72	72	-	72	220	244
SVTS C 08-X-A-42/00	42	42	-	250	274
SVTS C 08-X-A-36/12	48	36	12	250	274
SVTS C 08-X-A-30/24	54	30	24	250	274
SVTS C 08-X-A-24/36	60	24	36	250	274
SVTS C 08-X-A-18/48	66	18	48	250	274
SVTS C 08-X-A-12/60	72	12	60	250	274
SVTS C 08-X-A-06/72	78	6	72	250	274
SVTS C 08-X-A-00/84	84	-	84	250	274
SVTS C 08-X-A-48/00	48	48	-	280	304
SVTS C 08-X-A-42/12	54	42	12	280	304
SVTS C 08-X-A-36/24	60	36	24	280	304
SVTS C 08-X-A-30/36	66	30	36	280	304
SVTS C 08-X-A-24/48S	72	24	48	280	304
SVTS C 08-X-A-18/60	48	18	60	280	304
SVTS C 08-X-A-12/72	84	12	72	280	304
SVTS C 08-X-A-06/84	90	6	84	280	304
SVTS C 08-X-A-00/96	96	-	96	280	304

SVTS C 09

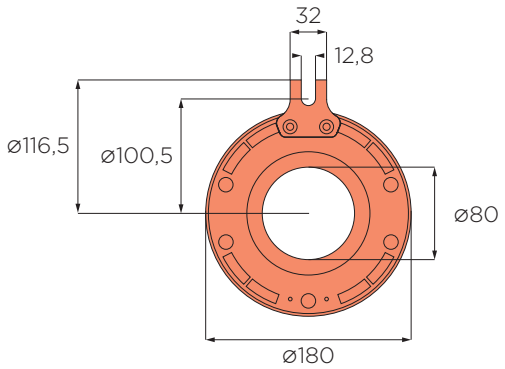

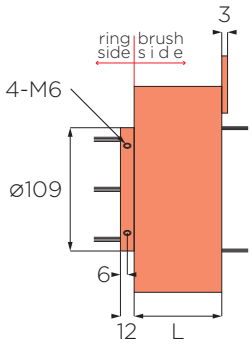

Custom cable length increase possible as multiples of 500mm

Model	Number of circuits			L	
	Total	Power 20A	Signals 5A	IP51	IP65
SVTS C 09-X-A-06/00	6	6	-	76.5	109
SVTS C 09-X-A-00/12	12	-	12	76.5	109
SVTS C 09-X-A-12/00	12	12	-	106.5	139
SVTS C 09-X-A-06/12	18	6	12	106.5	139
SVTS C 09-X-A-00/24	24	-	24	106.5	139
SVTS C 09-X-A-18/00	18	18	-	136.5	169
SVTS C 09-X-A-12/12	24	12	12	136.5	169
SVTS C 09-X-A-06/24	30	6	24	136.5	169
SVTS C 09-X-A-00/36	36	-	36	136.5	169
SVTS C 09-X-A-24/00	24	24	-	136.5	199
SVTS C 09-X-A-18/12	30	18	12	136.5	199
SVTS C 09-X-A-12/24	36	12	24	136.5	199
SVTS C 09-X-A-06/36	42	6	36	136.5	199
SVTS C 09-X-A-00/48	48	-	48	136.5	199
SVTS C 09-X-A-30/00	30	30	-	196.5	229
SVTS C 09-X-A-24/12	36	24	12	196.5	229
SVTS C 09-X-A-18/24	42	18	24	196.5	229
SVTS C 09-X-A-12/36	48	12	36	196.5	229
SVTS C 09-X-A-06/48	54	6	48	196.5	229
SVTS C 09-X-A-00/60	60	-	60	196.5	229
SVTS C 09-X-A-36/00	36	36	-	227	259
SVTS C 09-X-A-30/12	42	30	12	227	259
SVTS C 09-X-A-24/24	48	24	24	227	259
SVTS C 09-X-A-18/36	54	18	36	227	259
SVTS C 09-X-A-12/48	60	12	48	227	259
SVTS C 09-X-A-06/60	66	6	60	227	259
SVTS C 09-X-A-00/72	72	-	72	227	259
SVTS C 09-X-A-42/00	42	42	-	257	289
SVTS C 09-X-A-36/12	48	36	12	257	289
SVTS C 09-X-A-30/24	54	30	24	257	289
SVTS C 09-X-A-24/36	60	24	36	257	289
SVTS C 09-X-A-18/48	66	18	48	257	289
SVTS C 09-X-A-12/60	72	12	60	257	289
SVTS C 09-X-A-06/72	78	6	72	257	289
SVTS C 09-X-A-00/84	84	-	84	257	289
SVTS C 09-X-A-48/00	48	48	-	287	319
SVTS C 09-X-A-42/12	54	42	12	287	319
SVTS C 09-X-A-36/24	60	36	24	287	319
SVTS C 09-X-A-30/36	66	30	36	287	319
SVTS C 09-X-A-24/48	72	24	48	287	319
SVTS C 09-X-A-18/60	78	18	60	287	319
SVTS C 09-X-A-12/72	84	12	72	287	319
SVTS C 09-X-A-06/84	90	6	84	287	319
SVTS C 09-X-A-00/96	96	-	96	287	319

All dimensions in millimeters, unless otherwise specified

SVTS C 10

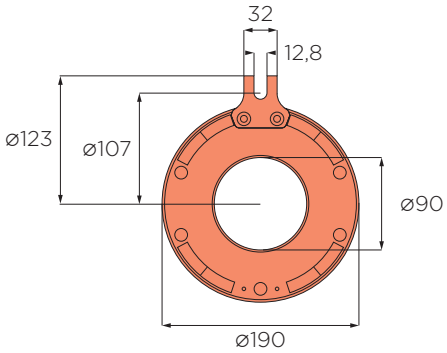

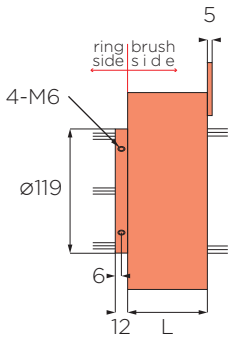

Custom cable length increase possible as multiples of 500mm

Model	Number of circuits			L	
	Total	Power	Signals	IP51	IP65
		20A	5A		
SVTS C 10-X-A-06/00	6	6	-	76.5	105
SVTS C 10-X-A-00/12	12	-	12	76.5	105
SVTS C 10-X-A-12/00	12	12	-	106.5	135
SVTS C 10-X-A-06/12	18	6	12	106.5	135
SVTS C 10-X-A-00/24	24	-	24	106.5	135
SVTS C 10-X-A-18/00	18	18	-	106.5	165
SVTS C 10-X-A-12/12	24	12	12	136.5	165
SVTS C 10-X-A-06/24	30	6	24	136.5	165
SVTS C 10-X-A-00/36	36	-	36	136.5	165
SVTS C 10-X-A-24/00	24	24	-	136.5	195
SVTS C 10-X-A-18/12	30	18	12	136.5	195
SVTS C 10-X-A-12/24	36	12	24	136.5	195
SVTS C 10-X-A-06/36	42	6	36	136.5	195
SVTS C 10-X-A-00/48	48	-	48	136.5	195
SVTS C 10-X-A-30/00	30	30	-	196.5	225
SVTS C 10-X-A-24/12	36	24	12	196.5	225
SVTS C 10-X-A-18/24	42	18	24	196.5	225
SVTS C 10-X-A-12/36	48	12	36	196.5	225
SVTS C 10-X-A-06/48	54	6	48	196.5	225
SVTS C 10-X-A-00/60	60	-	60	196.5	225
SVTS C 10-X-A-36/00	36	36	-	227	255.5
SVTS C 10-X-A-30/12	42	30	12	227	255.5
SVTS C 10-X-A-24/24	48	24	24	227	255.5
SVTS C 10-X-A-18/36	54	18	36	227	255.5
SVTS C 10-X-A-12/48	60	12	48	227	255.5
SVTS C 10-X-A-06/60	66	6	60	227	255.5
SVTS C 10-X-A-00/72	72	-	72	227	255.5
SVTS C 10-X-A-42/00	42	42	-	257	285.5
SVTS C 10-X-A-36/12	48	36	12	257	285.5
SVTS C 10-X-A-30/24	54	30	24	257	285.5
SVTS C 10-X-A-24/36	60	24	36	257	285.5
SVTS C 10-X-A-18/48	66	18	48	257	285.5
SVTS C 10-X-A-12/60	72	12	60	257	285.5
SVTS C 10-X-A-06/72	78	6	72	257	285.5
SVTS C 10-X-A-00/84	84	-	84	257	285.5
SVTS C 10-X-A-48/00	48	48	-	287	315.5
SVTS C 10-X-A-42/12	54	42	12	287	315.5
SVTS C 10-X-A-36/24	60	36	24	287	315.5
SVTS C 10-X-A-30/36	66	30	36	287	315.5
SVTS C 10-X-A-24/48	72	24	48	287	315.5
SVTS C 10-X-A-18/60	78	18	60	287	315.5
SVTS C 10-X-A-12/72	84	12	72	287	315.5
SVTS C 10-X-A-06/84	90	6	84	287	315.5
SVTS C 10-X-A-00/96	96	-	96	287	315.5

All dimensions in millimeters, unless otherwise specified

SVTS C 11

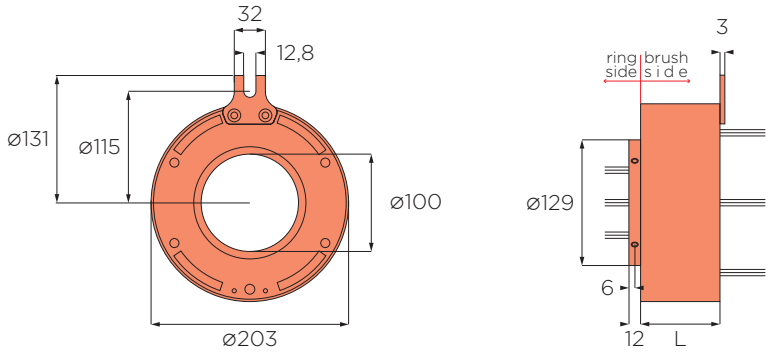

Custom cable length increase possible as multiples of 500mm

Model	Number of circuits			L	
	Total	Power	Signals	IP51	IP65
		20A	5A		
SVTS C 11-X-A-06/00	6	6	-	81.5	106,5
SVTS C 11-X-A-00/10	10	-	10	81.5	106,5
SVTS C 11-X-A-12/00	12	12	-	113	138
SVTS C 11-X-A-06/10	16	6	10	113	138
SVTS C 11-X-A-00/20	20	-	20	113	138
SVTS C 11-X-A-18/00	18	18	-	144.5	169,5
SVTS C 11-X-A-12/10	22	12	10	144.5	169,5
SVTS C 11-X-A-06/20	26	6	20	144.5	169,5
SVTS C 11-X-A-00/30	30	-	30	144.5	169,5
SVTS C 11-X-A-24/00	24	24	-	176	201
SVTS C 11-X-A-18/10	28	18	10	176	201
SVTS C 11-X-A-12/20	32	12	20	176	201
SVTS C 11-X-A-06/30	36	6	30	176	201
SVTS C 11-X-A-00/40	40	-	40	176	201
SVTS C 11-X-A-30/00	30	30	-	207.5	232,5
SVTS C 11-X-A-24/10	34	24	10	207.5	232,5
SVTS C 11-X-A-18/20	38	18	20	207.5	232,5
SVTS C 11-X-A-12/30	42	12	30	207.5	232,5
SVTS C 11-X-A-06/40	46	6	40	207.5	232,5
SVTS C 11-X-A-00/50	50	-	50	207.5	232,5
SVTS C 11-X-A-36/00	36	36	-	239	264
SVTS C 11-X-A-30/10	40	30	10	239	264
SVTS C 11-X-A-24/20	44	24	20	239	264
SVTS C 11-X-A-18/30	48	18	30	239	264
SVTS C 11-X-A-12/40	52	12	40	239	264
SVTS C 11-X-A-06/50	56	6	50	239	264
SVTS C 11-X-A-00/60	60	-	60	239	264
SVTS C 11-X-A-42/00	42	42	-	270.5	295,5
SVTS C 11-X-A-36/10	46	36	10	270.5	295,5
SVTS C 11-X-A-30/20	50	30	20	270.5	295,5
SVTS C 11-X-A-24/30	54	24	30	270.5	295,5
SVTS C 11-X-A-18/40	58	18	40	270.5	295,5
SVTS C 11-X-A-12/50	62	12	50	270.5	295,5
SVTS C 11-X-A-06/60	66	6	60	270.5	295,5
SVTS C 11-X-A-00/70	70	-	70	270.5	295,5
SVTS C 11-X-A-48/00	48	48	-	302	327
SVTS C 11-X-A-42/10	52	42	10	302	327
SVTS C 11-X-A-36/20	56	36	20	302	327
SVTS C 11-X-A-30/30	60	30	30	302	327
SVTS C 11-X-A-24/40	64	24	40	302	327
SVTS C 11-X-A-18/50	68	18	50	302	327
SVTS C 11-X-A-12/60	72	12	60	302	327
SVTS C 11-X-A-06/70	76	6	70	302	327
SVTS C 11-X-A-00/80	80	-	80	302	327

All dimensions in millimeters, unless otherwise specified

SVTS D Series

Rugged Slip Rings

Contents

Model	Out ⌀	Page
SVTS D 01	75mm	54
SVTS D 02	87mm	55

SVTS D Series

Rugged Slip Rings

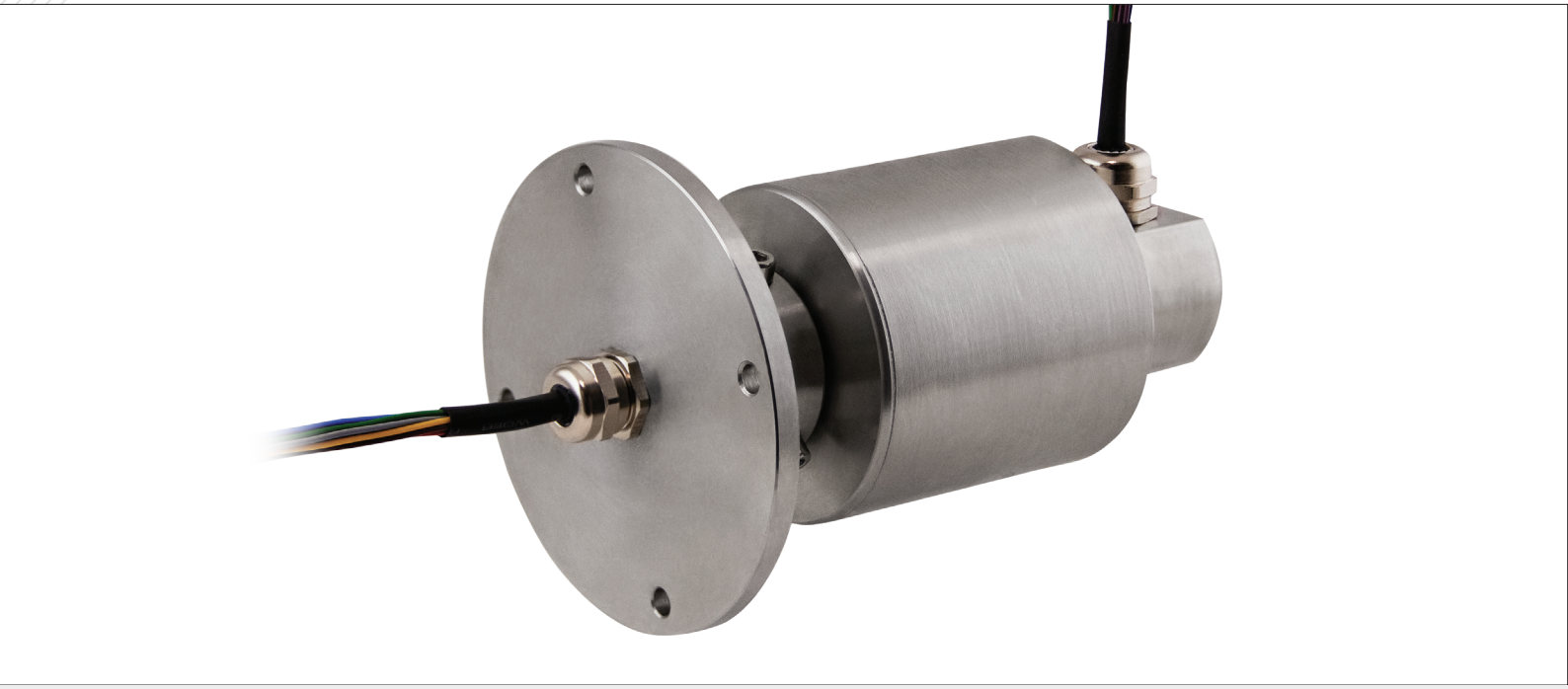

ROBUST | IP 65 | POWER, SIGNALS & FIELDBUS

The robust D Series Slip Rings have a stainless steel/aluminium housing and cable fittings on the slip ring inlet and outlet.
Particularly suitable for harsh environments where environmental conditions require sturdy objects and suitable materials for the food & beverage industry.
The use of fibre brush and gold-gold technology in the D series rotary joints, ensures a long life and high-quality signal transmission.

Benefits

- Robust mechanical construction
- Transmission of electric power/signals and fieldbuses in one unit
- Water resistant IP65 (standard)
- Many sizes
- Many customisations
- Combinable with fluidic rotary joints and FORJ

Main applications

Fillin & labelling machines	Medical systems
Capping machines	Packaging
Converting machines	Printing machines
Automatic machines	Process control
Hose reels	Robots
Machine tools	Rotary tables

Product code (go to page 9 for the detailed coding system)

SVTS D ⬠⬠ - □ - ▭ - ✕✕/⬡⬡ - ◇◇◇◇/✧✧✧✧ - △△ - ☆☆☆

D Series | ⬠ Model | □ IP grade[1] | ▭ Flange type | ✕ Power circuits | ⬡ Signal circuits

◇ Cable length (brush side) | ✧ Cable length (ring side) | △ Temperature range[2] | ☆ Special options

[1] Only IP65 [U]

[2] Standard [ST]; Extended [ET]

Features

Current	
Power	5A: AWG22 10A: AWG16 15A: AWG14
Signals	2A: AWG26
Voltage	400 VAC / 240 VDC
Cables	Tin plated (power); silver (signals) / PTFE insulated / colour coded
Cables length	Standard: 500mm; custom cable length increase possible as multiples of 500mm
Dialectic strength	500 VAC @ 50 Hz @ 60 sec
Insulation resistance	> 1000 MΩ / 500 VDC
Nominal speed	400 rpm (higher speeds upon request)
Dynamic contact resistance	< 0.01 Ω
Bearings	Steel
Housing	Stainless steel
Temperature	-20°C to +80°C (-40°C as option)
Protection	IP65
Expected lifetime	10^8 revolutions (depending on speed, environmental conditions and size)

Combinations

Electric	Fieldbus	Fluidic (combined solutions)
Signals	EtherCAT	Air
Power	Profinet	Oil
	Sercos	Gas
	Powerlink	Water
	Ethernet	
	Canbus	

Customizations

Cables	Mechanical design	Flange
Materials	Treatments	Cable exits

SVTS D 01

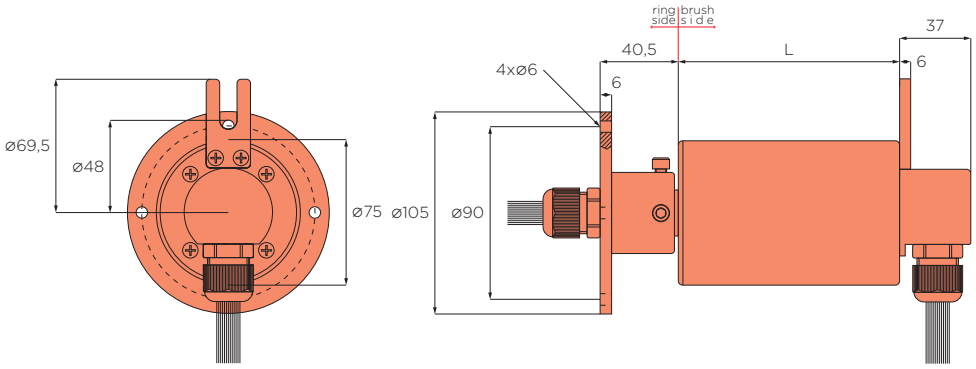

Custom cable length increase possible as multiples of 500mm

Model	Number of circuits			*L*	PG type
	Total	Power	Signals 5A		
SVTS D 01-U-A-00/06	6	-	6	63	PG7
SVTS D 01-U-A-00/12	12	-	12	77	PG9
SVTS D 01-U-A-00/18	18	-	18	91	PG11
SVTS D 01-U-A-00/24	24	-	24	105	PG16
SVTS D 01-U-A-00/30	30	-	30	119	-
SVTS D 01-U-A-00/36	36	-	36	133	-
SVTS D 01-U-A-00/42	42	-	42	147	-
SVTS D 01-U-A-00/48	48	-	48	161	-

All dimensions in millimeters, unless otherwise specified

SVTS D 02

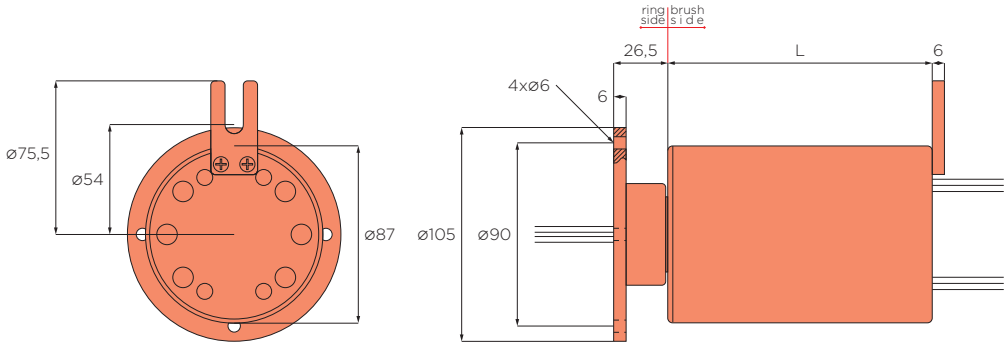

Custom cable length increase possible as multiples of 500mm

Model	Number of circuits			*L*	PG type
	Total	Power	Signals		
		15A	2A		
SVTS D 02-U-A-06/00	6	6	-	58,9	-
SVTS D 02-U-A-00/12	12	-	12	58,9	-
SVTS D 02-U-A-12/00	12	12	-	82,9	-
SVTS D 02-U-A-06/12	18	6	12	82,9	-
SVTS D 02-U-A-00/24	24	-	24	82,9	-
SVTS D 02-U-A-18/00	18	18	-	106	-
SVTS D 02-U-A-12/12	24	12	12	106	-
SVTS D 02-U-A-06/24	30	6	24	106	-
SVTS D 02-U-A-00/36	36	-	36	106	-
SVTS D 02-U-A-24/00	24	24	-	130	-
SVTS D 02-U-A-18/12	30	18	12	130	-
SVTS D 02-U-A-12/24	36	12	24	130	-
SVTS D 02-U-A-06/36	42	6	36	130	-
SVTS D 02-U-A-00/48	48	-	48	130	-
SVTS D 02-U-A-30/00	30	30	-	154	-
SVTS D 02-U-A-24/12	36	24	12	154	-
SVTS D 02-U-A-18/24	42	18	24	154	-
SVTS D 02-U-A-12/36	48	12	36	154	-
SVTS D 02-U-A-06/48	54	6	48	154	-
SVTS D 02-U-A-00/60	60	-	60	154	-
SVTS D 02-U-A-36/00	36	36	-	178	
SVTS D 02-U-A-30/12	42	30	12	178	-
SVTS D 02-U-A-24/24	48	24	24	178	-
SVTS D 02-U-A-18/36	54	18	36	178	-
SVTS D 02-U-A-12/48	60	12	48	178	-
SVTS D 02-U-A-06/60	66	6	60	178	-
SVTS D 02-U-A-00/72	72	-	72	178	-
SVTS D 02-U-A-42/00	42	42	-	202	-
SVTS D 02-U-A-36/12	48	36	12	202	-
SVTS D 02-U-A-30/24	54	30	24	202	-
SVTS D 02-U-A-24/36	60	24	36	202	-
SVTS D 02-U-A-18/48	66	18	48	202	-
SVTS D 02-U-A-12/60	72	12	60	202	-
SVTS D 02-U-A-06/72	78	6	72	202	-
SVTS D 02-U-A-00/84	84	-	84	202	-
SVTS D 02-U-A-48/00	48	48	-	202	-
SVTS D 02-U-A-42/12	54	42	12	202	-
SVTS D 02-U-A-36/24	60	36	24	202	-
SVTS D 02-U-A-30/36	66	30	36	202	-
SVTS D 02-U-A-24/48	72	24	48	202	-
SVTS D 02-U-A-18/60	78	18	60	202	-
SVTS D 02-U-A-12/72	84	12	72	202	-
SVTS D 02-U-A-06/84	90	6	84	202	-
SVTS D 02-U-A-00/96	96	-	96	202	-

All dimensions in millimeters, unless otherwise specified

SVTS E Series

Open Slip Rings

Contents

Model	In ⌀	Page
SVTS E 01	25,4mm	60
SVTS E 02	38,1mm	60
SVTS E 03	50mm	61
SVTS E 04	60mm	61

SVTS E Series

Open Slip Rings

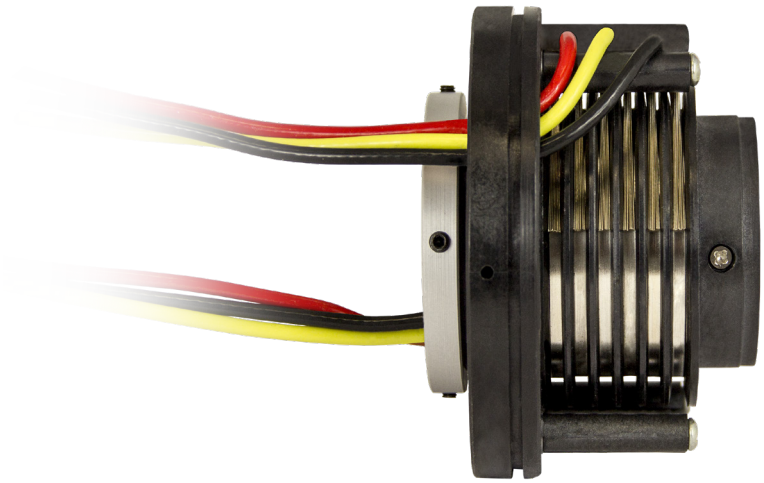

COST-EFFECTIVE THROUGH-BORE EASY INTEGRATION

The open E series provides high performances while keeping the Slip Ring compact in size and at a competitive price. Available with through holes with diameters ranging from 25 mm to 60 mm and currents from 20 A to 60 A.

The affordable rotary joints of the E series are ideal for integration into machine structures where there are no particular risks of contamination.

Benefits

- Cost-effective
- Easy integration

Main applications

- Wind turbines
- Rotating billboards
- Rotary tables
- Cable reels
- Palletisers

Product code (go to page 9 for the detailed coding system)

SVTS E ⬠⬠ - □ - ▭ - ✕✕ / ⬡⬡ - ◇◇◇◇ / ✧✧✧✧ - △△ - ☆☆☆

E Series | Model | IP grade[1] | Flange type | Power circuits | Signal circuits

Cable length (brush side) | Cable length (ring side) | Temperature range[2] | Special options[3]

[1] Only IP00
[2] Only Standard [ST]
[3] 20A circuits [001]; 40A circuits [002]; 60A circuits [003]

Features

Current	
Power	20A: 1xAWG14 (each circuit) 40A: 2xAWG14 (each circuit) 60A: 3xAWG14 (each circuit)
Signals	2A: AWG26
Voltage	400 VAC/DC
Cables	Tin plated - PVC insulation
Cables length	Standard: 500mm; custom cable length increase possible as multiples of 500mm
Insulation resistance	> 1000 MΩ/500 VDC
Nominal speed	300 rpm (higher speed upon request)
Dynamic contact resistance	< 0.01Ω
Bearings	Steel
Housing	ABS (hard plastic)
Temperature	-20°C +80°C
Protection	IP00
Expected lifetime	10^8 revolutions (depending on speed, environmental conditions and size)

Combinations

Electric	Fluidic (combined solutions)
Signals	Air
Power	Oil
	Gas
	Water

Customizations

Cables

SVTS E 01

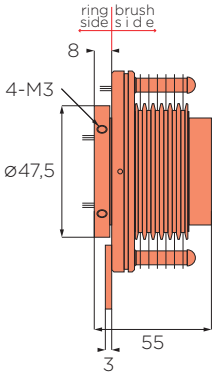

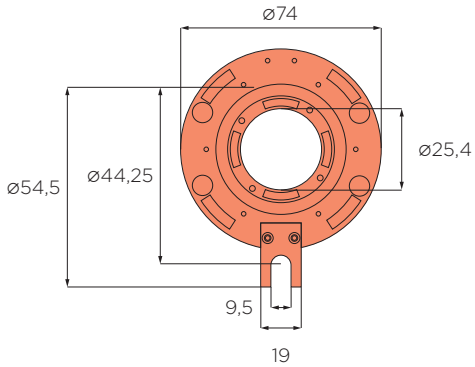

Custom cable length increase possible as multiples of 500mm

Model	Number of circuits			Diameters	
	Total	Power		Inside ø (trough-bore)	*L*
		20A	40A		
SVTS E 01-R-A-03/00-...-001	3	3	-	25,4	55
SVTS E 01-R-A-03/00-...-002	3	-	3	25,4	55

SVTS E 02

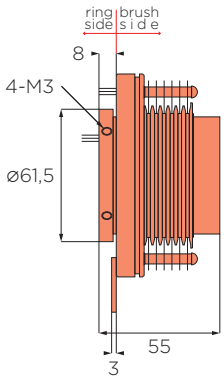

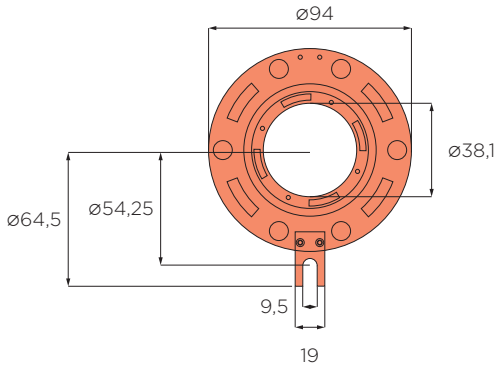

Custom cable length increase possible as multiples of 500mm

Model	Number of circuits			Dimensions	
	Total	Power		Inside ø (trough-bore)	*L*
		20A	40A		
SVTS E 02-R-A-03/00-...-001	3	3	-	38,1	55
SVTS E 02-R-A-03/00-...-002	3	-	3	38,1	55

All dimensions in millimeters, unless otherwise specified

SVTS E 03

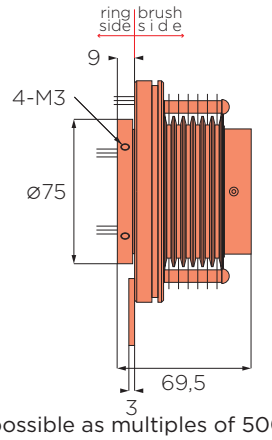

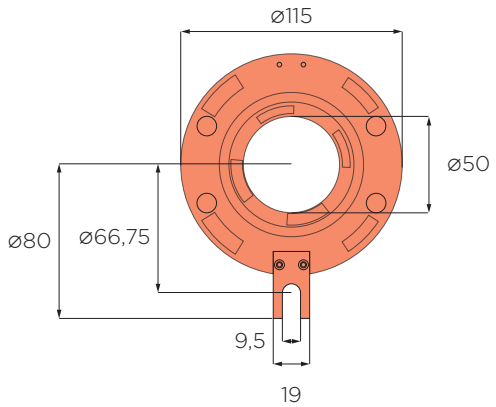

Custom cable length increase possible as multiples of 500mm

Model	Number of circuits				Dimensions	
	Total	Power			Inside ø (trough-bore)	*L*
		20A	40A	60A		
SVTS E 03-R-A-03/00-...-001	3	3	-	-	50	70
SVTS E 03-R-A-03/00-...-002	3	-	3	-	50	70
SVTS E 03-R-A-03/00-...-003	3	-	-	3	50	70

SVTS E 04

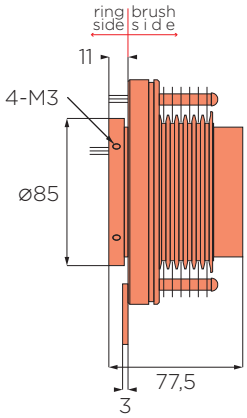

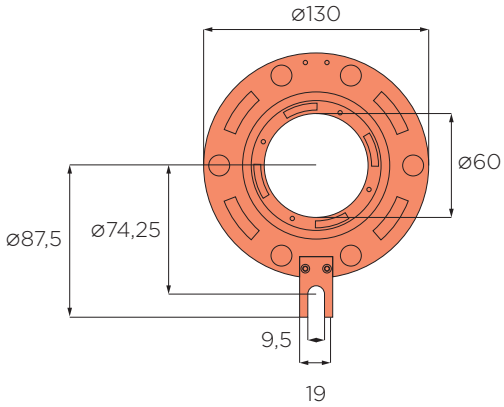

Custom cable length increase possible as multiples of 500mm

Model	Number of circuits				Dimensions	
	Total	Power			Inside ø (trough-bore)	*L*
		20A	40A	60A		
SVTS E 04-R-A-03/00-...-001	3	3	-	-	60	78
SVTS E 04-R-A-03/00-...-002	3	-	3	-	60	78
SVTS E 04-R-A-03/00-...-003	3	-	-	3	60	78

All dimensions in millimeters, unless otherwise specified

SVTS F Series

Flat Slip Rings

Contents

Model	In ⌀	Out ⌀	Page
SVTS F 01	40mm	180mm	66

F Series

Flat Slip Rings

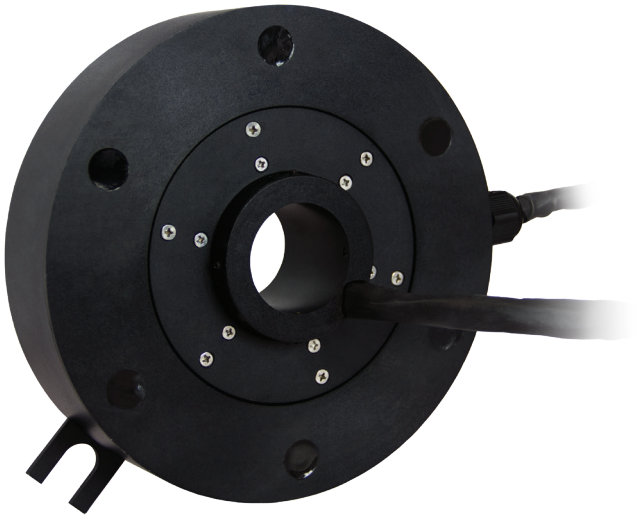

SUPER FLAT | POWER, SIGNALS & FIELDBUS | LONG-LIFE

The flat F Series Slip Rings have a special design, that means these rotary joints have a height of only 45 mm ensuring up to 17 signal circuits and 3 power circuits up to 15 A.

These rotary joints are designed for applications where height is a critical factor, they provide performance similar to the C series from which they derive and are maintenance-free.

Benefits

- Flat design
- Long-life
- Transmission of electric power/signals and fieldbuses in one unit
- Many customisations available

Main applications

Revolving doors	Medical equipments
Rotary tables	Packaging
Robots	Cable reels

Product code (go to page 9 for the detailed coding system)

SVTS F ⬠⬠ - □ - ▭ - ✕✕ / ⬡⬡ - ◇◇◇◇ / ✧✧✧✧ - △△ - ☆☆☆

F Series | Model | IP grade[1] | Flange type | Power circuits | Signal circuits

Cable length (brush side) | Cable length (ring side) | Temperature range[2] | Special options

[1] Only IP51 [S]
[2] Only Standard [ST]

Features

Nbr. of circuits	20 (more upon request)
Current	
Power	15A: AWG16
Signals	5A: AWG22
Voltage	400 VAC / 240 VDC
Cables	
Power	Tin plated / PVC insulated
Signals	Silver plated / PVC insulated
Cables length	500 mm standard (more lengths upon request)
Insulation resistance	
Power	> 1000 MΩ/500 VDC
Signals	> 500 MΩ/500 VDC
Nominal speed	250 rpm (higher speeds upon request)
Bearings	Steel
Housing	Aluminium
Temperature	-20°C to +80°C
Protection	IP51
Expected lifetime	10^8 revolutions (depending on speed, environmental conditions and size)

Combinations

Electric
Signals
Power

Customizations

Cables	Flange	Materials
Treatments		

SVTS F 01

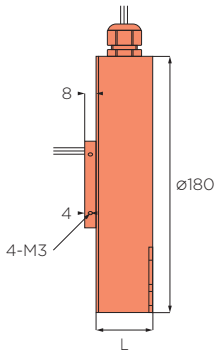

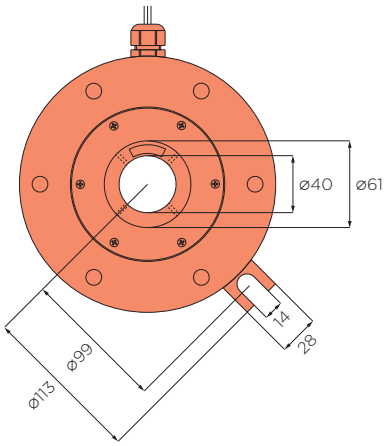

Custom cable length increase possible as multiples of 500mm

Model	Number of circuits			*L*
	Total	Power	Signals	
		10A	5A	
SVTS F 01-S-A-03/17	20	3	17	40

All dimensions in millimeters, unless otherwise specified

Notes

All dimensions in millimeters, unless otherwise specified

Custom Slip Rings

Case Histories

servotecnica

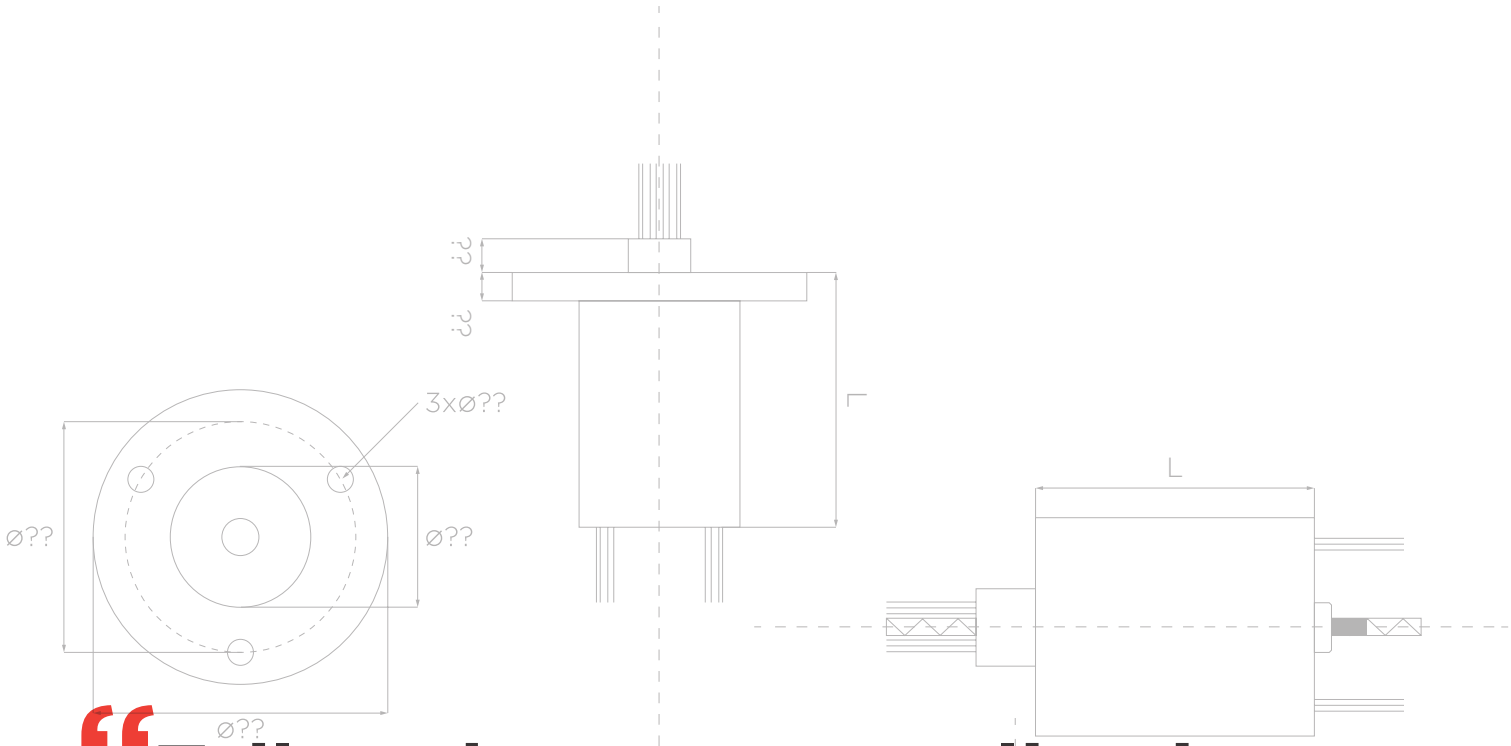

“Tailored on your application”

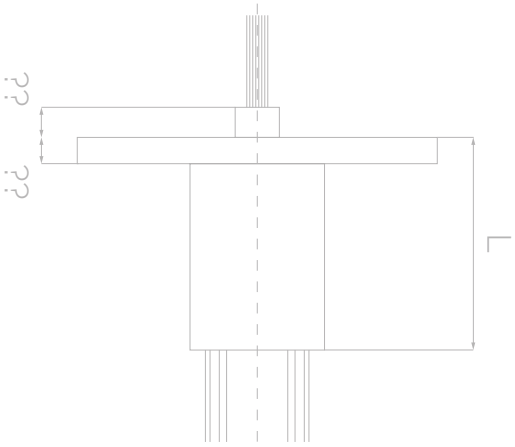

CUSTOM

Customer-driven development

We can design products tailored to your needs, starting from scratch. Some examples of motor customizations are on cables, on mechanical geometry or high temperature environment.

Our metal-on-metal technology can be adapted to your project's requirements granting the finest transmission quality. Our engineers have the necessary know-how to significally minimize the development time to provide a solution driven by a proactive flow of information.

The 40 years' experience in the automation world, the focus on contact technologies and the customer commitment approach, are what have always led us to deliver the best solutions and services.

The wide range of electric rotary joints can furthermore be combined with fluidic or optical rotary joints and likewise be customized.

The result is an unlimited number of combinations coupled with a single interface that offers simple solutions to complex applications.

What can we customize?

- Cables
- Connectors
- Current
- Voltage
- Fieldbuses
- Mechanical geometry
- Materials
- Treatments
- Speed
- Sealing
- Feedback integrations
- Special quality controls and tests before delivery

Rugged Slip Ring with Schneider hybrid cable

High data-rate Rotary Joint

Custom solution specifically designed for the labeling industry. The request was to bring onto a rotating carousel from one to three Schneider Hybrid cables, carrying: power, Sercos III communication and signals.
The exposure to an harsh environment has required the use of a stainless steel housing and IP65 protection degree.

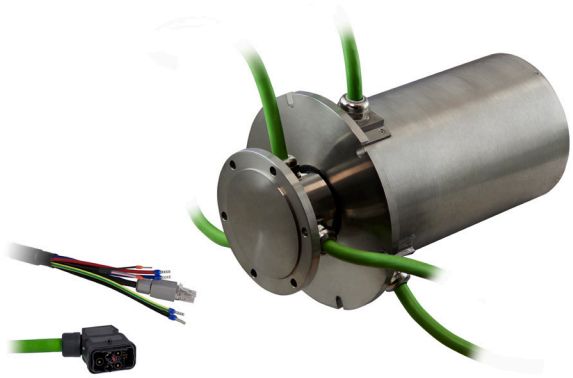

Power circuits
Up to 3 hybrid Schneider - Elau cables (with connectors)
Sercos III (100 BaseT EtherNet)
Stainless steel housing
IP 65 Protection

Through-bore Slip Ring with Bosch hybrid cable

High data-rate Rotary Joint

Custom solution specifically designed for the printing industry capable of transmitting: high quality Sercos III communication, power supply and signals over a single hybrid cable with minimum decay, no matter how long the distance. The challenge was to obtain a clean output signal despite the through-hole width, minimizing noise and crosstalk between channels.

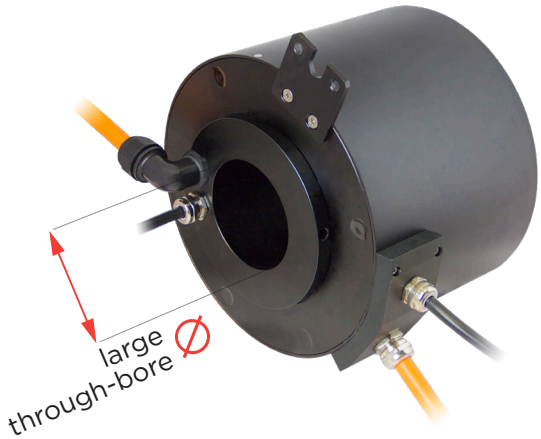

Through-bore: 100mm
BOSCH hybrid cables (complete with connectors)
Sercos III (100 BaseT EtherNet)
Custom mechanical design with tight centring tolerance

Through-bore Slip Ring with EtherCAT

High data-rate Rotary Joint

Custom solution specifically designed for the electronics industry. The customer came to us requiring to switch from a CAN solution to an EtherCAT one. To address this request, our team developed a Slip Ring integrated in a network with more than 100 EtherCAT nodes, providing power and EtherCAT onto a rotary table.
We finalised the development running special tests to ensure transmission quality over time.

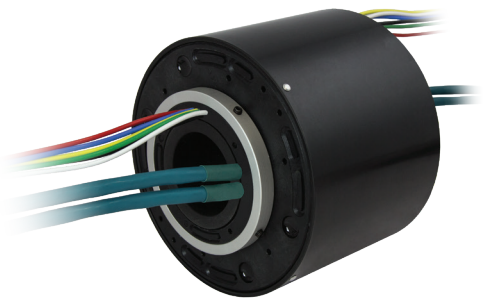

Power circuits

EtherCAT cables

100 BaseT EtherNet fieldbuses

Hybrid Rotary Joint + Inductive transducer

Electric & Fiber Optic Rotary Joint + Zettlex IncOder

Custom solution specifically designed for a drone antenna. The main purpose was to obtain a very high number of circuits in very little space and weight. Furthermore the environmental conditions were very tough requiring extended temperature range and special surface treatment to reduce external noise and corrosion.
The integration with the Zettlex incOder, sealed the partenership between our customer and us.

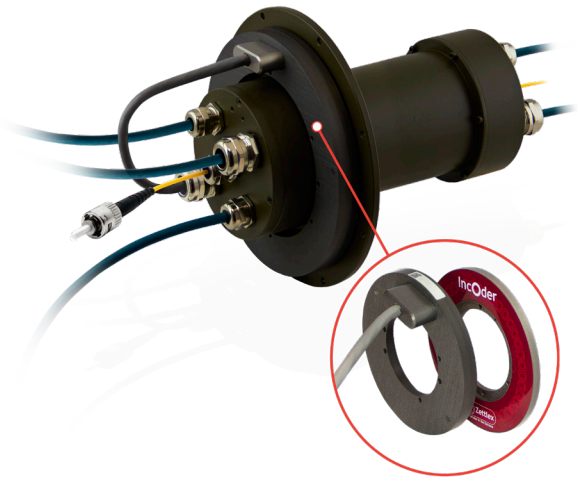

Rugged design

Operating temperature: -40° C + 80° C

Protection IP 65

Shock & vibration resistant

Rotary joint

10 power circuits

55 signal circuits

One multi-mode fiber optic channel

Aluminium housing

Anticordal 6061 aluminium housing and surface treatment Surtec 650

Absolute IncOder

Inductive encoder

Resolution: up to 22 bit/turn

Interfaces: SSI / BiSS / TTL

Compact Slip Ring with Radio Frequency

Electric Rotary Joint with RF connector

Mixed custom solution designed for an antenna, featuring 12 circuits and a high frequency RF joint at 18 GHz. Special materials have also been used to ensure the operating temperature range of -40 +80°C, and the custom flange, in addition to a special reaction shaft, made possible to fully meet the customer's needs.

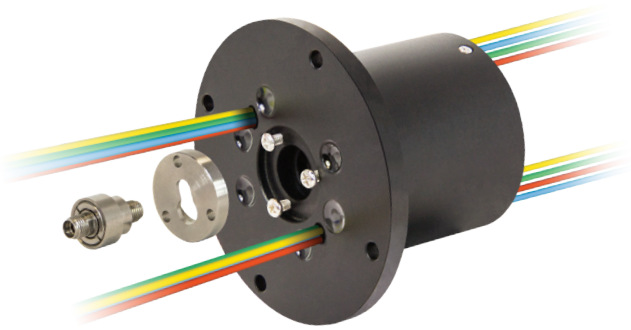

Electric

Nominal speed: 100rpm

Protection: IP51

Operating temperature: -20°C +80°C

Circuits: 4 x 5 A; 8 x 250 mA

RF

Frequency: 18 GHz

VSWR: 1,3

Insertion loss: 0,2

Connectors: SMA-K

Hybrid Rotary Joint with Bosch cable

Electric & Fluidic Rotary Joint + Sercos III

Mixed custom solution with electric Rotary Joint composed by a Bosch hybrid cable for the transmission of power supply, Sercos III, signals and additional DC power. The Slip Ring was then combined with a 2-passage pneumatic rotary joint that can work at different pressures.
The modular design also allows to assemble Slip Rings of different lengths and sizes.

Power circuits

Signal circuits

Sercos III (100 BaseT EtherNet)

Bosch hybrid cables

2 pneumatic passages

Hybrid Rotary Joint with Ethernet

Electric & Fluidic Rotary Joint + Ethernet

Custom mixed solution designed for a robotic arm. The main purpose was to obtain a compact and lightweight rotary joint to minimise inertia load.
The perfect solution turned out to be the combination of a customized SVTS A electric Rotary Joint with 15 signals and an Ethernet channel (ensuring the higher circuit density possible in the smallest size), with a 4 independent passages 3/8" LT fluidic rotary joint.
What did the trick was the compact and light aluminum body of the rotary union.

Compact
4 3/8" passages
Max pressure: 40 bar
1000baseT Ethernet
15 signal circuits

Micro Slip Ring

Miniaturized Technology

Custom solution specifically designed for a robotic arm. The target was to reduce dimensions and weight to the minimum mantaining a good mechanical resistance. We redesigned the internal structure and developed a new platform that granted the possibility to miniaturize our solutions. We came up with a 6 circuits Slip Ring in a sturdy stainless-steel housing limiting the dimensions to an incredible 8mm diameter and a length of 11mm.

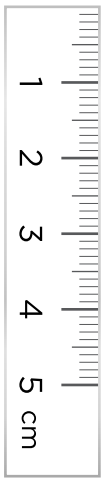

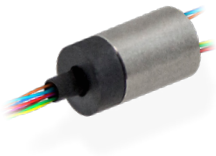

Up to 6mm diameter
Up to 36 circuits
Ethernet option
Stainless steel housing

HEADQUARTERS - ITALY

Servotecnica S.p.A.
Via E. Majorana, 4
20834 Nova Milanese (MB)
Italy
+39 03624921 | info@servotecnica.com

GERMANY

Servotecnica G.m.b.H.
Kelsterbacher Strasse, 20
65479 Raunheim - Deutschland
info@servotecnica.de | www.servotecnica.de

Notes

Hello,
how can I help you?

servotecnica

Your local contact

www.servotecnica.com